MULTI-FUNCTION PID CONTROLLER

FUNCTION BLOCK LIST

Contents

1. INTRODUCTION 5

2. FUNCTION BLOCKS COMMON TO ALL MODELS 6

System Common Table (for SC100/200 series) 7
System Common Table (for ABL) 9
System Common Table (for remote I/O) 11
Basic PID 13
Advanced PID 15
Manual Loader 18
Ratio Setter 19
Indicator 21
Di Receive Terminal 22
Do Send Terminal 24
Ai Receive Terminal 25
Ao Send Terminal 27
Discrete Contact Input / Accumulated Value Output 28
Pulse Adder 29
Pulse/Analog Multiplication 30
Pulse Accumulator 31
Pulse Input / Discrete Contact Output 32
Batch Program 33
Addition / Subtraction 35
Multiplication 36
Division 37
Square Root Extractor 38
Absolute Value 39
Non-Linear Gain, Deadband 40
Low-end Cutout 41
Segment Linearizer 42
Temperature/Pressure Compensation 44
Rate of Change Limit 45
First Order Lag 46
First Order Lag with Two Time Constants 47
Ramp Buffer 48
Mean Average 49
Moving Average 50
Lead Time Computation 52
Dead Time Computation 53
Dead Time Compensation 54
Accumulator (momentary value input) 55
Ramp Program Setter 56
High/Low Limiter 58
Deviation Limiter 59
Input Selector (with ramp control at switching) 60
Output Selector 61
Input Selector (2 points) 62
Input Selector (8 points) 63
Maximum Value Selector 65
Minimum Value Selector 66
Parameter Selector (2 points) 67
Parameter Generator (8 points) 68

High/Low Alarm 69
Deviation Alarm 70
Rate of Change Alarm 71
Parameter Setter 72
Numeral Converter 74
Weight Totalizer 77
Analog/Pulse Duration Converter 78
Analog Signal Hold 79
ITEM Reader 80
Contact Distributor 81
Analog Signal Comparator 83
Annunciator 85
ON-OFF Timer 87
Timer 88
Counter 89
Internal Switch 90
System's Internal Switch 91
Sequential Control Program 92

3. FIELD TERMINAL BLOCKS 97

SC100 Field Terminal 98
SC100 Extension Field Terminal 1 100
SC100 Extension Field Terminal 2 103
SC200 Field Terminal 106
SC200 Extension Field Terminal 1 108
SC200 Extension Field Terminal 2 111
SC200W Field Terminal 114
SC200W Extension Field Terminal 1 116
SC200W Extension Field Terminal 2 119
SC110 Field Terminal 122
SC110 Extension Field Terminal 1 124
SC110 Extension Field Terminal 2 127
SC210 Field Terminal 130
SC210 Extension Field Terminal 1 132
SC210 Extension Field Terminal 2 135
SC210W Field Terminal 138
SC210W Extension Field Terminal 1 140
SC210W Extension Field Terminal 2 143
SML-A4 Field Terminal 146
SML-C7, -C8 Field Terminal 147
SML-E5 Field Terminal 148
SML-G3 Field Terminal 149
SML-G4 Field Terminal 151
SML-M4 Field Terminal 152
SML-P4 Field Terminal 153
SML-R2 Field Terminal 155
SML-R3 Field Terminal 156
SML-S5 Field Terminal 158
SML-S6 Field Terminal 159
ABL Field Terminal 161
ABL Extension Field Terminal 1 163
ABL Extension Field Terminal 2 166

4. EXPLANATIONS 169
4.1 GENERAL DESCRIPTION 169
4.2 RELATION BETWEEN FUNCTION BLOCKS 169
4.3 FUNCTION BLOCK ALLOCATIONS 170
4.4 CONNECTING BETWEEN FUNCTION BLOCKS 171
4.4.1 EXAMPLE OF CONNECTION TERMINALS REPRESENTATION IN A FUNCTION BLOCK 171
4.4.2 CONNECTING ANALOG SIGNALS 171
4.4.3 CONNECTING DISCRETE SIGNALS 171
4.4.4 PARAMETER SETTER 171
4.4.5 ITEM READER 172
4.5 SOFTWARE COMMUNICATION BY COMMUNICATION TERMINALS 173
Appendix 1. FUNCTION BLOCK ERROR CODES 174
Appendix 2. SC SERIES VERSION UPGRADE INFORMATION 175

1. INTRODUCTION

■ Symbols used in function block tables

◆ : Parameter is remotely modifiable by using Parameter Setter block.
Refer to General Description of the Parameter Setter block (Model 79).

★ : Setting data
Parameter is required or can be set in order to use the relevant function block.

ITEMS without ◆ or ★ : ITEM is used to monitor operating status or values.

● : Parameter is always modifiable.

▲ : Parameter is modifiable when ITEM 01 (maintenance switch) is set to PROGRAM mode.

❄ : Parameter is modifiable when ITEM 01 (maintenance switch) is set to SIMULATION mode.

■ Function block limitation depending upon ROM version

Certain function blocks or functions (ITEM) may not be available depending upon ROM version of the controller. ROM version can be verified at GROUP 00, ITEM 99.
ROM version limitations are identified with symbols such as SC 1.50 . Refer to Appendix 2. SC SERIES VERSION UPGRADE INFORMATION for supplementary information.

Unavailable Functions

- Rate-of-Change Limit (Model 17)

Limited Functions

- Basic PID (Model 21)
- Advanced PID (Model 22)
- Segment Linearizer (Model 58)
- Moving Average (Model 64)
- SCxxx Extension Field Terminal 1 (Model F72, F73, Group 04)
- SCxxx Extension Field Terminal 2 (Model F70, F71, F72, F73, Group 05)

■Cold start and warm start

- Warm start executes the program and sequence from the start with holding the parameters.
- Cold start executes the program and sequence from the start with clearing the parameters.
  Cold start is recommended when the program and the sequence have been changed.
- Execute the cold start with following procedure.
  Execute from the “PU-2 screen” of programing unit (model: PU-2x) or builder software (model: SFEW3E).
  SC series can also execute from the “configuration view”.
- Procedure to execute cold start
  1. Enter [Group][0][0] and after (OK) is displayed, Enter [Item][0][1] [Data][1] [Enter].
     For SC series, a yellow line on the side of the display blinks and shifts to the configuration mode.
  2. Execute the reset operation. Enter [Item][0][3] [Data][2] [Enter]. The unit starts restarting.

2. FUNCTION BLOCKS COMMON TO ALL MODELS

MODEL		NAME	[GROUP]
SYSTEM COMMON TABLE			
		For SC100/200 Series	[G00]
		For Remote I/O	[G00]
CONTROL			
BCA	21	Basic PID	[G02...03]
ECA	22	Advanced PID	[G02...03]
MVA	23	Manual Loader	[G02...03]
RSA	24	Ratio Setter	[G02...03]
IND	25	Indicator	[G02...03]
COMMUNICATION TERMINALS			
CDI	31	Di Receive Terminal	[G11...26]
CDO	32	Do Send Terminal	[G11...26]
CAI	33	Ai Receive Terminal	[G11...26]
CAO	34	Ao Send Terminal	[G11...26]
OPERATIONS			
PULSE INPUT			
QIP	44	Discrete Contact Input/Accumulated Value Output	[G30...61]
PAD	45	Pulse Adder	[G30...61]
QAM	46	Pulse/Analog Multiplication	[G30...61]
QSS	47	Pulse Accumulator	[G30...61]
QPO	48	Pulse Input/Discrete Contact Output	[G30...61]
BPS	49	Batch Program	[G62...69]
ARITHMETIC			
ADS	51	Addition/Subtraction	[G30...61]
MLT	52	Multiplication	[G30...61]
DVD	53	Division	[G30...61]
FUNCTIONS			
SQR	54	Square Root Extractor	[G30...61]
ABS	55	Absolute Value	[G30...61]
NLN	56	Non-linear Gain, Deadband	[G30...61]
DRP	57	Low-end Cutout	[G30...61]
LIN	58	Segment Linearizer	[G72...79]
TCP	59	Temperature/Pressure Compensation	[G30...61]
TIME FUNCTIONS			
RCL	17	Rate of Change Limit	[G30...61]
LAG	60	First Order Lag	[G30...61]
2LG	61	First Order Lag with two time constants	[G30...61]
RMP	62	Ramp Buffer	[G30...61]
MAJ	63	Mean Average	[G30...61]
RAV	64	Moving Average	[G30...61]
LED	65	Lead Time Computation	[G30...61]
DTM	66	Dead Time Computation	[G30...61]
DTC	67	Dead Time Compensation	[G30...61]

MODEL		NAME	[GROUP]
OPERATIONS (continued)			
QNT	68	Accumulator	[G30...61]
PRG	69	Ramp Program Setter	[G72...79]
	(58	Ramp Program by Segment Linearizer)	
SIGNAL LIMITERS			
HLL	70	High/Low Limiter	[G30...61]
DVL	71	Deviation Limiter	[G30...61]
SIGNAL SELECTORS			
SFT	18	Input Selector (with ramp control at switching)	[G30...61]
OTS	19	Output Selector	[G30...61]
INS	72	Input Selector (2 points)	[G30...61]
INE	85	Input Selector (8 points)	[G30...61]
MAX	73	Maximum Value Selector	[G30...61]
MIN	74	Minimum Value Selector	[G30...61]
CTS	75	Parameter Selector (2 points)	[G30...61]
CTE	86	Parameter Generator (8 points)	[G30...61]
ALARM			
PVA	76	High/Low Alarm	[G30...61]
DVA	77	Deviation Alarm	[G30...61]
VRA	78	Rate of Change Alarm (rate of change function)	[G30...61]
OTHERS			
PMS	79	Parameter Setter	[G30...61]
BCD	80	Numeral Converter	[G30...61]
QWT	81	Weight Totalizer (load cell input)	[G30...61]
ADT	82	Analog/Pulse Duration Converter	[G30...61]
AMM	83	Analog Signal Hold (max. value, momentary value or min. value)	[G30...61]
ITR	84	ITEM Reader	[G30...61]
SEQUENTIAL CONTROL			
DCN	87	Contact Distributor	[G30...61]
ACP	88	Analog Comparator	[G30...61]
ANN	89	Annunciator	[G30...61]
TMC	90	ON-OFF Timer	[G30...61]
TMR	91	Timer	[G30...61]
CTR	92	Counter	[G30...61]
ISW	93	Internal Switch	[G30...61]
SSW	94	System's Internal Switch	[G80]
SEQ	95	Sequential Control Program	[G81...92]

BLOCK NAME

System Common Table (for SC100/200 series)

GROUP [00] ★: Setting data

ITEM	MDFY	DATA INPUT	DISPLAY (e.g.)	CONTENTS
00	●	0, 1	CD: N	Module switch (0: actual, 1: expansion) (Remark 1)
01	●	(always modifiable)		■ MAINTENANCE SWITCH (lock command) Switching Group 00 maintenance switch affects all other groups.
		0	MT: 0	MONITOR mode: data monitoring only
		1	MT: 1	PROGRAM mode: "▲" marked data modifiable
		S	MT: S	SIMULATION mode: "❄" marked data modifiable
02	IND			■ CONTROL STATUS INDICATION
			RUN	Running
			STOP	Stopped
03	▲			■ OPERATION COMMAND
		0	STOP	Stop
		1	HOT START	Hot start
		2	COLD START	Cold start
06	IND			■ Nest Bus TRANSMISSION STATUS INDICATION
			RUN	Transmitting
			STOP	Stopped
★ 08	▲			■ Nest Bus TRANSMISSION MODE
		0	0	Send/Receive mode C#: 00 to 0F
		1	1	Receive only mode C#: 10 to 1E (C# upper digit is automatically set to '1'. Data from upper bus cannot be received.)
★ 11	▲	50 to 3000 (100 to 3000 for SC200W, SC210W)	NNNN	■ COMPUTATION CYCLE (msec) Selectable in every 10 milliseconds
12	IND		NNN%	■ CONTROL LOAD RATE INDICATION (%)
13	●	0	NNN%	■ MAX. CONTROL LOAD RATE INDICATION (%) Reset when "0" is entered.
				■ SYSTEM STATUS INDICATION (error indication)
21	IND			• EEPROM Data Base Failed
			ALLRIGHT	All blocks proved normal
			GROUP NN	Abnormal block No. indication (NN: GROUP No.)
22	IND			• PV Abnormality (Pv 1 OR Pv 2) PV input H/L alarm status in the field terminal block indicated
			PV NORMAL	PV proved normal
			PV ABNORMAL	PV proved abnormal
23	IND			• MV Feedback Abnormality (Mv 1 OR Mv 2) deviation alarm status of MV check input and MV output in the field terminal block indicated
			MV NORMAL	MV feedback proved normal
			MV ABNORMAL	MV feedback proved abnormal
24	IND			• Block Abnormality (GROUP No. indicated)
			ALLRIGHT	All blocks proved normal
			GROUP NN	Abnormal block No. indication (NN: GROUP No.)
25	IND			• Control Overload
			LOAD: RIGHT	Appropriate control load
			LOAD: OVER	Control overload
26	IND			• Supervisory communication error
			COM: NN	Number of communication error events (NN)

ITEM	MDFY	DATA INPUT	DISPLAY (e.g.)	CONTENTS
30	IND			• Supervisory communication error
			COM: PER: NN	Number of parity error events (NN)
31	IND			• Supervisory communication error
			COM: FER: NN	Number of framing error events (NN)
32	IND			• Supervisory communication error
			COM: OER: NN	Number of overrun error events (NN)
33	IND			• Supervisory communication error
			COM: SER: NN	Number of sum check error events (NN)
35	IND			• Abnormal FB No. hold
			ALLRIGHT	All blocks proved normal
			GROUP NN	Abnormal block No. indication (NN: GROUP No.)
36	IND			• Abnormality contents hold
			ER: NN	Abnormal block contents (NN)
40	●			■ COMPUTATION CYCLE SWITCHING FLAG
		0, 1	0	Normal
			1	Computation cycle switched
				Reset when “0” is entered. Once reset, “LOAD: RIGHT” is set in ITEM 25.
★ 51	▲	0 – F	CD : 0	■ CARD NO. REGISTRATION (Remark 2)
60	▲			■ RUN CONTACT ERROR RESET MODE (Remark 3)
		0, 1	RUN: 0	Automatic reset
			RUN: 1	Manual reset
61	●			■ RUN CONTACT ERROR RESET FLAG (Remark 3)
		0, 1	0	Normal
			1	Reset (valid when ITEM 60 is set to ‘manual reset’)
95	▲	1	BLOCK RELEASE	■ DELETE MODEL NO. COMMAND (Remark 4)
			(initial display *)	Group 00, 01, 04, 05 or 80 are not deleted.
★ 96	IND	00 – 99	FIELD: 73	■ FIELD TERMINAL MODEL IDENTIFICATION
★ 97	▲		SC210	■ HARDWARE MODEL NO. INDICATION (max. 8 characters, for use in the supervisory system)
99	IND		DCSSC N.NN	■ ROM VERSION INDICATION

Remark 1: Only available with SC200W and SC210W
Remark 2: The controller is automatically reset when the card No. is changed.
Remark 3: ROM Version 1.50 or later
Remark 4: In case of SC200W and SC210W, the module specified at ITEM 00 ‘Module switch’ is deleted.

BLOCK NAME

System Common Table (for ABL)

GROUP [00] ★: Setting data

	ITEM	MDFY	DATA INPUT	DISPLAY (e.g.)	CONTENTS
	01	●	(always modifiable)		■ MAINTENANCE SWITCH (lock command) Switching Group 00 maintenance switch affects all other groups.
			0	MT: 0	MONITOR mode: data monitoring only
			1	MT: 1	PROGRAM mode: "▲" marked data modifiable
			S	MT: S	SIMULATION mode: "❄" marked data modifiable
	02	IND			■ CONTROL STATUS INDICATION
				RUN	Running
				STOP	Stopped
	03	▲			■ OPERATION COMMAND
			0	STOP	Stop
			1	HOT START	Hot start
			2	COLD START	Cold start
	06	IND			■ Nest Bus TRANSMISSION STATUS INDICATION
				RUN	Transmitting
				STOP	Stopped
★	08	▲			■ Nest Bus TRANSMISSION MODE
			0	0	Send/Receive mode C#: 00 to 0F
			1	1	Receive only mode C#: 10 to 1E (C# upper digit is automatically set to '1'. Data from upper bus cannot be received.)
★	11	▲	100 to 3000	NNNN	■ COMPUTATION CYCLE (msec) Selectable in every 10 milliseconds
	12	IND		NNN%	■ CONTROL LOAD RATE INDICATION (%)
	13	●	0	NNN%	■ MAX. CONTROL LOAD RATE INDICATION (%) Reset when "0" is entered.
					■ SYSTEM STATUS INDICATION (error indication)
	21	IND			• EEPROM Data Base Failed
				ALLRIGHT	All blocks proved normal
				GROUP NN	Abnormal block No. indication (NN: GROUP No.)
	22	IND			• PV Abnormality (Pv 1 OR Pv 2) PV input H/L alarm status in the field terminal block indicated
				PV NORMAL	PV proved normal
				PV ABNORMAL	PV proved abnormal
	23	IND			• MV Feedback Abnormality (Mv 1 OR Mv 2) deviation alarm status of MV check input and MV output in the field terminal block indicated
				MV NORMAL	MV feedback proved normal
				MV ABNORMAL	MV feedback proved abnormal
	24	IND			• Block Abnormality (GROUP No. indicated)
				ALLRIGHT	All blocks proved normal
				GROUP NN	Abnormal block No. indication (NN: GROUP No.)
	25	IND			• Control Overload
				LOAD: RIGHT	Appropriate control load
				LOAD: OVER	Control overload

ITEM	MDFY	DATA INPUT	DISPLAY (e.g.)	CONTENTS
26	IND			• Supervisory communication error
			COM: NN	Number of communication error events (NN)
30	IND			• Supervisory communication error
			COM: PER: NN	Number of parity error events (NN)
31	IND			• Supervisory communication error
			COM: FER: NN	Number of framing error events (NN)
32	IND			• Supervisory communication error
			COM: OER: NN	Number of overrun error events (NN)
33	IND			• Supervisory communication error
			COM: SER: NN	Number of sum check error events (NN)
35	IND			• Abnormal FB No. hold
			ALLRIGHT	All blocks proved normal
			GROUP NN	Abnormal block No. indication (NN: GROUP No.)
36	IND			• Abnormality contents hold
			ER: NN	Abnormal block contents (NN)
40	●			■ COMPUTATION CYCLE SWITCHING FLAG
		0	0	Normal
			1	Computation cycle switched
				Reset when “0” is entered. Once reset, “LOAD: RIGHT” is set in ITEM 25.
★ 51	▲	0 – F	CD : 0	■ CARD NO. REGISTRATION *
★ 53	▲	1	MD : N	■ OPERATION MODE (for future)
★ 55	▲	0, 1	SM : N	■ START MODE (0: Hot start, 1: Cold start)
★ 60	▲	1 – 247	ND : 1	■ Modbus node address
★ 61	▲	0 – 3	SP : 3	■ Modbus baud rate (0: 4800, 1: 9600, 2: 19200, 3: 38400 bps)
★ 62	▲	0 – 2	PA : 2	■ Modbus parity bit (0: none, 1: even, 2: odd)
95	▲	1	BLOCK RELEASE	■ DELETE MODEL NO. COMMAND
			(initial display *)	Group 00, 01, 04, 05 or 80 are not deleted.
★ 96	IND	00 – 99	FIELD: 64	■ FIELD TERMINAL MODEL IDENTIFICATION
★ 97	▲		ABL	■ HARDWARE MODEL NO. INDICATION (max. 8 characters, for use in the supervisory system)
99	IND		DCSABL N.NN	■ ROM VERSION INDICATION

Note: The controller is automatically reset when the card No. is changed.

BLOCK NAME

System Common Table (for remote I/O)

GROUP [00] ★: Setting data

ITEM	MDFY	DATA INPUT	DISPLAY (e.g.)	CONTENTS
01	●	(always modifiable)		■ MAINTENANCE SWITCH (lock command) Switching Group 00 maintenance switch affects all other groups.
		0	MT: 0	MONITOR mode: data monitoring only
		1	MT: 1	PROGRAM mode: "▲" marked data modifiable
		S	MT: S	SIMULATION mode: "❄" marked data modifiable
02	IND			■ CONTROL STATUS INDICATION
			RUN	Running
			STOP	Stopped
03	▲			■ OPERATION COMMAND
		0	STOP	Stop
		1	HOT START	Hot start
		2	COLD START	Cold start
06	IND			■ Nest Bus TRANSMISSION STATUS INDICATION
			RUN	Transmitting
			STOP	Stopped
★ 08	▲			■ Nest Bus TRANSMISSION MODE
		0	0	Send/Receive mode C#: 00 to 0F
		1	1	Receive only mode C#: 10 to 1E (C# upper digit is automatically set to '1'. Data from upper bus cannot be received.)
★ 11	▲			■ COMPUTATION CYCLE
		0	1 Sec	1 second
		1	0.5 Sec	0.5 second
		2	0.25 Sec	0.25 second
		3	0.12 Sec	0.12 second
12	IND		NNN%	■ CONTROL LOAD RATE INDICATION (%)
13	●	0	NNN%	■ MAX. CONTROL LOAD RATE INDICATION (%) Reset when "0" is entered.
				■ SYSTEM STATUS INDICATION (error indication)
21	IND			• EEPROM Data Base Failed
			ALLRIGHT	All blocks proved normal
			GROUP NN	Abnormal block No. indication (NN: GROUP No.)
22	IND			• PV Abnormality (PV input H/L alarm status in the field terminal block indicated)
			PV NORMAL	PV proved normal
			PV ABNORMAL	PV proved abnormal
23	IND			• MV Feedback Abnormality (deviation alarm status of MV check input and MV output in the field terminal block indicated)
			MV NORMAL	MV feedback proved normal
			MV ABNORMAL	MV feedback proved abnormal
24	IND			• Block Abnormality (GROUP No. indicated)
			ALLRIGHT	All blocks proved normal
			GROUP NN	Abnormal block No. indication (NN: GROUP No.)
25	IND			• Control Overload
			LOAD: RIGHT	Appropriate control load
			LOAD: OVER	Control overload

	ITEM	MDFY	DATA INPUT	DISPLAY (e.g.)	CONTENTS
	40	●			■ COMPUTATION CYCLE SWITCHING FLAG
			0, 1	0	Normal
				1	Computation cycle switched
					Reset when “0” is entered. Once reset, “LOAD: RIGHT” is set in ITEM 25.
	95	▲	1	BLOCK RELEASE	■ DELETE MODEL NO. COMMAND
				(initial display *)	Group 00, 01 or 80 are not deleted.
★	96	IND	00 – 99	FIELD: 24	■ FIELD TERMINAL MODEL IDENTIFICATION
★	97	▲		SML-A4	■ HARDWARE MODEL NO. INDICATION (max. 8 characters, for use in the supervisory system)
	99	IND		18MF N.NN	■ ROM VERSION INDICATION

MODEL NO.	BLOCK NAME	MODEL NO.
21	Basic PID	21

ABBR: BCA

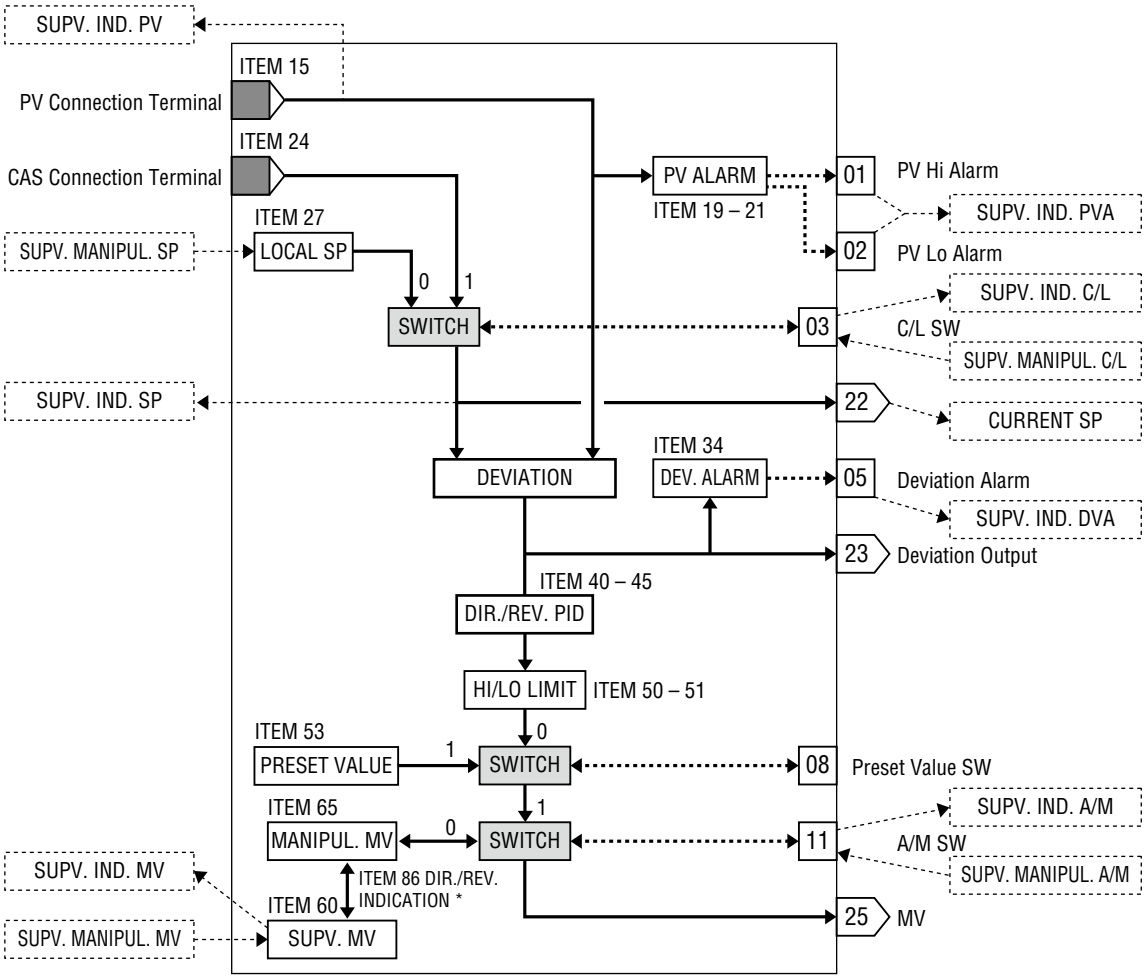

*Direct action MV value is applied for internal processing regardless of ITEM 86 setting.

GROUP [02, 03] ◆: Automatically changeable parameters ★: Setting data

ITEM	MDFY	DATA INPUT	DISPLAY (e.g.)	CONTENTS
01	●	(always modifiable)		■ MAINTENANCE SWITCH (lock command)
		0	MT: 0	MONITOR mode: data monitoring only
		1	MT: 1	PROGRAM mode: "▲" marked data modifiable
02	IND	No input	ER: NN	Error indication (00: normal, 01 – 90: error)
★ **10**	▲	**21**	**MD: 21**	**BASIC PID (model)** '-' to clear.
PROCESS VALUE (PV)				
★ 15	▲	GGNN	P#: 0121	PV connection terminal (error if not connected) GG: Group No. NN: terminal No.
16	▲	-15.00 – 115.00 %	PV: NNN.NN	PV %
◆★19	●	-15.00 – 115.00 %	PH: NNN.NN	PV high alarm setpoint
◆★20	●	-15.00 – 115.00 %	PL: NNN.NN	PV low alarm setpoint
◆★21	●	0.00 – 115.00 %	HS: NNN.NN	Hysteresis (deadband)
22	▲	0, 1	01: N	PV high alarm
23	▲	0, 1	02: N	PV low alarm

ITEM	MDFY	DATA INPUT	DISPLAY (e.g.)	CONTENTS
SETPOINT VALUE (SP)				
★ 24	▲	GGNN	C#: 0225	CAS connection terminal
25	▲	-15.00 – 115.00 %	SP: NNN.NN	CAS %
◆★27	●	-15.00 – 115.00 %	SP: NNN.NN	Local SP %
★ 29	▲	0, 1	SM: N	Setting mode (0: local, 1: cascade/local)
◆ 30	●	0, 1	03: N	C/L SW (0: local, 1: cascade)
33	▲	-15.00 – 115.00 %	22: NNN.NN	Current SP %
DEVIATION				
◆★34	●	0.00 – 115.00 %	DL: NNN.NN	Deviation alarm setpoint (hysteresis (deadband) in ITEM 21)
35	▲	0, 1	05: N	Deviation alarm
36	▲	±115.00 %	23: NNN.NN	Deviation output %
CONTROL				
★ 40	▲	0, 1	DR: N	Control direction (0: direct, 1: reverse [MV decreases with PV increase])
★ 41	▲	0, 1	DM: N	Derivative method (0: PV derivative, 1: deviation derivative)
◆★42	●	1 – 1000 %	PB: NNNN	Proportional band
◆★43	●	0.00 – 100.00 min.	TI: NNN.NN	Integral time (0.00: no integral action)
◆★44	●	0.00 – 10.00 min.	TD: NN.NN	Derivative time (0.00: no derivative action)
★ 45	▲	1, 2, 4, 8, 16, 32, 64	CP: NN	Control cycle (multiple of basic control cycle)
CONTROL OUTPUT MV				
◆★50	●	±115.00 %	MH: NNN.NN	Output high limit
◆★51	●	±115.00 %	ML: NNN.NN	Output low limit
52	▲	0, 1	08: N	Preset value SW (1: preset)
◆★53	●	±115.00 %	MI: NNN.NN	Preset value
◆ 59	●	0, 1	11: N	A/M SW (0: manual, 1: auto)
◆ 60	●	±115.00 %	MV: NNN.NN	Supervisory indication / manipulated MV %
◆★64	●	±115.00 %	RS: NNN.NN	Manual reset (usable when no I action is employed)
65	▲	±115.00 %	25: NNN.NN	MV %
★ 66	▲	0, 1	MS: N	Smooth tracking output with local SP change (0: without, 1: with)
★ 68	▲	0, 1	ARW: N	Integral action range (0: MH – ML, 1: set range) SC 1.50
★ 69	▲	±115.00 %	ARH: NNN.NN	Integral action high limit (valid when ITEM 68 is set to '1') SC 1.50
★ 70	▲	±115.00 %	ARL: NNN.NN	Integral action low limit (valid when ITEM 68 is set to '1') SC 1.50
★ 71	▲	0, 1		LOCAL SP limit range (0: PH – PL, 1: set range) SC 1.70
◆★72	●	-15.00 – 115.00 %	SH: NNN.NN	LOCAL SP high limit (valid when ITEM 71 is set to '1') SC 1.70
◆★73	●	-15.00 – 115.00 %	SL: NNN.NN	LOCAL SP low limit (valid when ITEM 71 is set to '1') SC 1.70
SUPERVISORY INDICATION USE				
★ 80	▲	alphanumeric	TG: XXX X	Tag name (10 characters max.)
★ 81	▲	alphanumeric	TC: XXXX X	Tag comment (16 characters max.)
★ 82	▲	±32000	MH: 15000	Upper range (in engineering unit)
★ 83	▲	±32000	ML: 0	Lower range (in engineering unit)
★ 84	▲	0, 1, 2, 3, 4, 5	DP: 1	Decimal point position (from rightmost digit)
★ 85	▲	alphanumeric	TU: XXX X	Engineering unit (8 characters max.)
★ 86	▲	0, 1	MD: N	MV reverse indication (0: direct, 1: reverse) (1: send/receive 100 – 0% proportionally to 0 – 100%.)

Refer to the "4. Control Blocks" of the "Function Block Application Manual (EM-6461-C)" for details of each ITEM.

MODEL NO.	BLOCK NAME	MODEL NO.
22	Advanced PID	22

ABBR: ECA

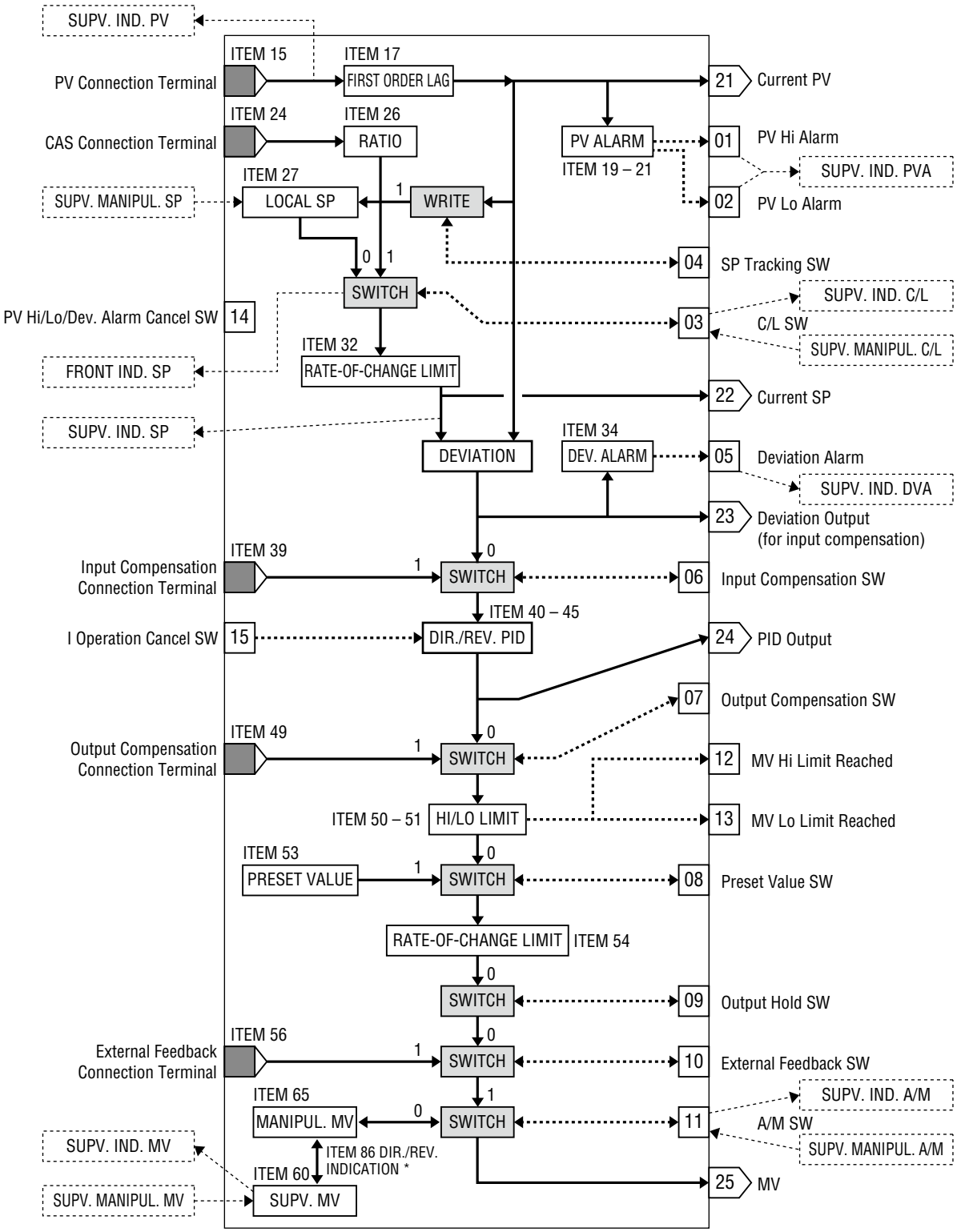

*Direct action MV value is applied for internal processing regardless of ITEM 86 setting.

GROUP [02, 03] ◆: Automatically changeable parameters ★: Setting data

ITEM	MDFY	DATA INPUT	DISPLAY (e.g.)	CONTENTS
01	●	(always modifiable)		■ MAINTENANCE SWITCH (lock command)
		0	MT: 0	MONITOR mode: data monitoring only
		1	MT: 1	PROGRAM mode: "▲" marked data modifiable
02	IND	No input	ER: NN	Error indication (00: normal, 01 – 90: error)
★ **10**	▲	**22**	**MD: 22**	**ADVANCED PID (model)** '-' to clear.
PROCESS VALUE (PV)				
★ 15	▲	GGNN	P#: 0121	PV connection terminal (error if not connected) GG: Group No. NN: terminal No.
16	▲	-15.00 – 115.00 %	PV: NNN.NN	PV %
◆★17	▲	0.0 – 100.0 s	PT: NNN.N	PV first order lag time constant (0.0: without)
18	▲	-15.00 – 115.00 %	21: NNN.NN	Current PV %
◆★19	●	-15.00 – 115.00 %	PH: NNN.NN	PV high alarm setpoint
◆★20	●	-15.00 – 115.00 %	PL: NNN.NN	PV low alarm setpoint
◆★21	●	0.00 – 115.00 %	HS: NNN.NN	Hysteresis (deadband)
22	▲	0, 1	01: N	PV high alarm
23	▲	0, 1	02: N	PV low alarm
SETPOINT VALUE (SP)				
★ 24	▲	GGNN	C#: 0225	CAS connection terminal
25	▲	-15.00 – 115.00 %	SP: NNN.NN	CAS %
◆★26	●	±32.000	RT: NN.NNN	Ratio setting (signal % ratio)
◆★27	●	-15.00 – 115.00 %	SP: NNN.NN	Local SP %
★ 29	▲	0, 1	SM: N	Setting mode (0: local, 1: cascade/local)
◆ 30	▲	0, 1	03: N	C/L SW (0: local, 1: cascade)
31	●	0, 1	04: N	SP tracking SW (0: OFF, 1: ON)
★ 32	●	0.00 – 115.00 %/s	SR: NNN.NN	SP rate-of-change limit (0.00: without)
33	▲	-15.00 – 115.00 %	22: NNN.NN	Current SP %
DEVIATION				
◆★34	●	0.00 – 115.00 %	DL: NNN.NN	Deviation alarm setpoint (hysteresis (deadband) in ITEM 21)
35	▲	0, 1	05: N	Deviation alarm
36	▲	±115.00 %	23: NNN.NN	Deviation output %
★ 37	▲	0, 1	06: N	Input compensation SW (0: without, 1: with)
★ 38	▲	0, 1, 2, 3	IM: N	Input compensation method (0: without, 1: addition, 2: subtraction, 3: substitution)
★ 39	▲	GGNN	I#: 0221	Input compensation connection terminal
CONTROL				
★ 40	▲	0, 1	DR: N	Control direction (0: direct, 1: reverse [MV decreases with PV increase])
★ 41	▲	0, 1	DM: N	Derivative method (0: PV derivative, 1: deviation derivative)
◆★42	●	1 – 1000 %	PB: NNNN	Proportional band
◆★43	●	0.00 – 100.00 min.	TI: NNN.NN	Integral time (0.00: no integral action)
◆★44	●	0.00 – 10.00 min.	TD: NN.NN	Derivative time (0.00: no derivative action)
★ 45	▲	1, 2, 4, 8, 16, 32, 64	CP: NN	Control cycle (multiple of basic control cycle)

Refer to the "4. Control Blocks" of the "Function Block Application Manual (EM-6461-C)" for details of each ITEM.

ITEM	MDFY	DATA INPUT	DISPLAY (e.g.)	CONTENTS
CONTROL OUTPUT (MV)				
46	▲	±115.00 %	24: NNN.NN	PID output %
★ 47	▲	0, 1	07: N	Output compensation SW (0: without, 1: with)
★ 48	▲	0, 1, 2, 3	OM: N	Output compensation method (0: without, 1: addition, 2: subtraction, 3: substitution)
★ 49	▲	GGNN	O#: 0221	Output compensation connection terminal
◆★50	●	±115.00 %	MH: NNN.NN	Output high limit
◆★51	●	±115.00 %	ML: NNN.NN	Output low limit
52	▲	0, 1	08: N	Preset value SW (1: preset)
◆★53	●	±115.00%	MI: NNN.NN	Preset value
◆★54	●	0.00 – 115.00 %/s	MR: NNN.NN	Output rate-of-change limit (0.00: without)
55	▲	0, 1	09: N	Output hold SW (0: without, 1: hold)
★ 56	▲	GGNN	M#: 0221	External feedback connection terminal
57	▲	±115.00 %	FV: NNN.NN	External feedback %
58	▲	0, 1	10: N	External feedback SW (0: without, 1: with)
◆ 59	●	0, 1	11: N	A/M SW (0: manual, 1: auto)
◆ 60	●	±115.00 %	MV: NNN.NN	Supervisory indication / manipulated MV %
61	▲	0, 1	12: N	MV high limit reached (Remark 1)
62	▲	0, 1	13: N	MV low limit reached (Remark 1)
63	▲	0, 1	14: N	PV alarm, deviation alarm function stop command (Remark 2)
◆★64	●	±115.00 %	RS: NNN.NN	Manual reset (usable when no I action is used.)
65	▲	±115.00 %	25: NNN.NN	MV %
★ 66	▲	0, 1	MS: N	Smooth tracking output with local SP change (0: without, 1: with)
67	▲	0, 1	15: N	Cancel I action SW (0: with I action, 1: cancel)
★ 68	▲	0, 1	ARW: N	Integral action range (0: MH – ML, 1: set range) SC 1.50
★ 69	▲	±115.00 %	ARH: NNN.NN	Integral action high limit (valid when ITEM 68 is set to '1') SC 1.50
★ 70	▲	±115.00 %	ARL: NNN.NN	Integral action low limit (valid when ITEM 68 is set to '1') SC 1.50
★ 71	▲	0, 1		LOCAL SP limit range (0: PH – PL, 1: set range) SC 1.70
◆★72	●	-15.00 – 115.00 %	SH: NNN.NN	LOCAL SP high limit (valid when ITEM 71 is set to '1') SC 1.70
◆★73	●	-15.00 – 115.00 %	SL: NNN.NN	LOCAL SP low limit (valid when ITEM 71 is set to '1') SC 1.70
SUPERVISORY INDICATION USE				
★ 80	▲	alphanumeric	TG: XXX X	Tag name (10 characters max.)
★ 81	▲	alphanumeric	TC: XXXX X	Tag comment (16 characters max.)
★ 82	▲	±32000	MH: 15000	Upper range (in engineering unit)
★ 83	▲	±32000	ML: 0	Lower range (in engineering unit)
★ 84	▲	0, 1, 2, 3, 4, 5	DP: 1	Decimal point position (from rightmost digit)
★ 85	▲	alphanumeric	TU: XXX X	Engineering unit (8 characters max.)
★ 86	▲	0, 1	MD: N	MV reverse indication (0: direct, 1: reverse) (1: send/receive 100 – 0% proportionally to 0 – 100%.)

Remark 1: While the PID control loop is closed, it is turned to '0'. When the MV reaches the output limit, the relevant output turns to '1'. When the PID control is not activated (e.g. in manual control mode), both high and low limits turn to '1'.
Remark 2: With this switch set to '1', PV high/low alarm and deviation alarm functions are cancelled.

MODEL NO.	BLOCK NAME	MODEL NO.
23	Manual Loader	23

ABBR: MVA

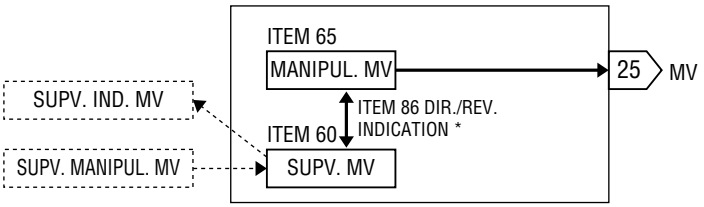

*Direct action MV value is applied for internal processing regardless of ITEM 86 setting.

GROUP [02, 03] ◆: Automatically changeable parameters ★: Setting data

ITEM	MDFY	DATA INPUT	DISPLAY (e.g.)	CONTENTS
01	●	(always modifiable)		■ MAINTENANCE SWITCH (lock command)
		0	MT: 0	MONITOR mode: data monitoring only
		1	MT: 1	PROGRAM mode: "▲" marked data modifiable
02	IND	No input	ER: NN	Error indication (00: normal, 01 – 90: error)
★ **10**	▲	**23**	**MD: 23**	**MANUAL LOADER (model)** '-' to clear.
OUTPUT				
◆ 60	●	±115.00 %	MV: NNN.NN	Supervisory indication / manipulated MV %
65	▲	±115.00 %	25: NNN.NN	MV %
SUPERVISORY INDICATION USE				
★ 80	▲	alphanumeric	TG: XXX X	Tag name (10 characters max.)
★ 81	▲	alphanumeric	TC: XXXX X	Tag comment (16 characters max.)
★ 86	▲	0, 1	MD: N	MV reverse indication (0: direct, 1: reverse) (1: send/receive 100 – 0% proportionally to 0 – 100%.)

MODEL NO.	BLOCK NAME	MODEL NO.
24	Ratio Setter	24

ABBR: RSA

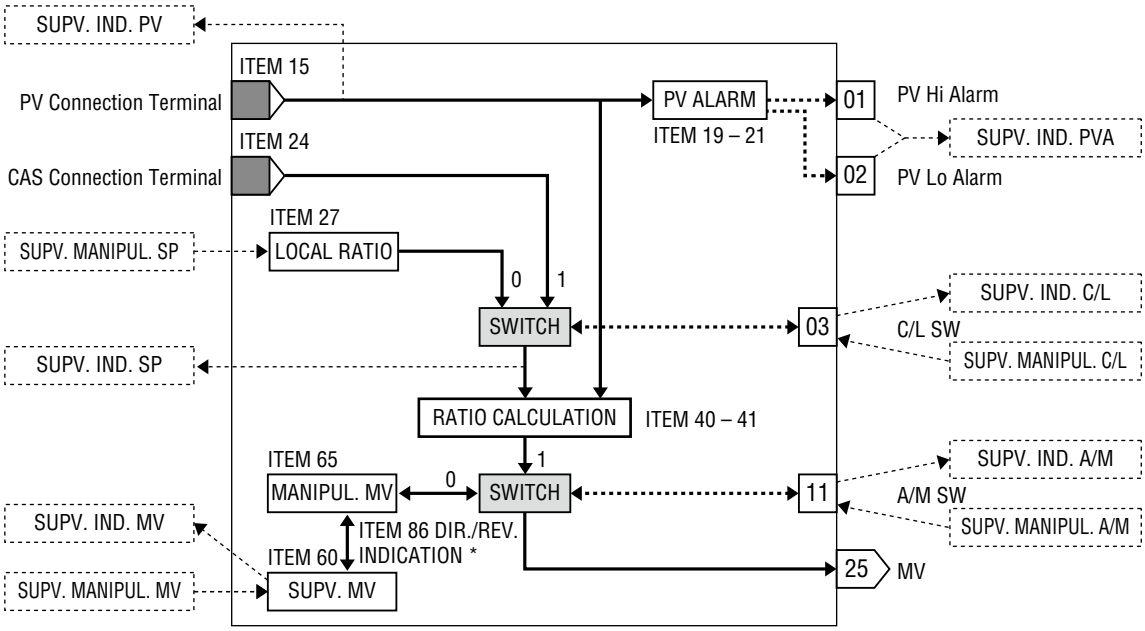

*Direct action MV value is applied for internal processing regardless of ITEM 86 setting.

RATIO EQUATION $MV = SP (PV - A_1) + B_1$

MV : output (%)
SP : ±32.000
PV : reference input (%)
A_1 : input bias (%)
B_1 : output bias (%)

Note: Internal data ±32000 (±320.00%) is converted into ±32.000 to give CAS SP ratio.

GROUP [02, 03] ◆: Automatically changeable parameters ★: Setting data

ITEM	MDFY	DATA INPUT	DISPLAY (e.g.)	CONTENTS
01	●	(always modifiable)		■ MAINTENANCE SWITCH (lock command)
		0	MT: 0	MONITOR mode: data monitoring only
		1	MT: 1	PROGRAM mode: "▲" marked data modifiable
02	IND	No input	ER: NN	Error indication (00: normal, 01 – 90: error)
★ **10**	▲	**24**	**MD: 24**	**RATIO SETTER (model)** '-' to clear.
PROCESS VALUE (PV)				
★ 15	▲	GGNN	P#: 0221	PV connection terminal (error if not connected) GG: Group No. NN: terminal No.
16	▲	-15.00 – 115.00 %	PV: NNN.NN	PV %
◆★19	●	-15.00 – 115.00 %	PH: NNN.NN	PV high alarm setpoint
◆★20	●	-15.00 – 115.00 %	PL: NNN.NN	PV low alarm setpoint
◆★21	●	0.00 – 115.00 %	HS: NNN.NN	Hysteresis (deadband)
22	▲	0, 1	01: N	PV high alarm
23	▲	0, 1	02: N	PV low alarm
OPERATION				
★ 24	▲	GGNN	C#: 0221	CAS connection terminal
25	▲	±32.000	SP: NN.NNN	CAS SP ratio
◆★27	●	±32.000	SP: NN.NNN	Local SP ratio
★ 29	▲	0, 1	SM: N	Setting mode (0: local, 1: cascade/local)
◆ 30	●	0, 1	03: N	C/L SW (0: local, 1: cascade)
33	●	±32.000	SP: NN.NNN	Current SP ratio
◆★40	▲	±115.00 %	A1: NNN.NN	A_1 Input bias
◆★41	▲	±115.00 %	B1: NNN.NN	B_1 Output bias
OUTPUT				
◆ 59	●	0, 1	11: N	A/M SW (0: manual, 1: auto)
◆ 60	●	±115.00 %	MV: NNN.NN	Supervisory indication / manipulated MV %
65	▲	±115.00 %	25: NNN.NN	MV %
◆★72	●	±32.000	SH: NN.NNN	LOCAL SP ratio high limit SC 1.70
◆★73	●	±32.000	SL: NN.NNN	LOCAL SP ratio low limit SC 1.70
SUPERVISORY INDICATION USE				
◆ 80	▲	alphanumeric	TG: XXX X	Tag name (10 characters max.)
◆ 81	▲	alphanumeric	TC: XXXX X	Tag comment (16 characters max.)
◆ 82	▲	±32000	MH: 15000	Upper range (in engineering unit)
◆ 83	▲	±32000	ML: 0	Lower range (in engineering unit)
◆ 84	▲	0, 1, 2, 3, 4, 5	DP: 1	Decimal point position (from rightmost digit)
◆ 85	▲	alphanumeric	TU: XXX X	Engineering unit (8 characters max.)
◆ 86	▲	0, 1	MD: N	MV reverse indication (0: direct, 1: reverse) (1: send/receive 100 – 0% proportionally to 0 – 100%.)

MODEL NO.	BLOCK NAME	MODEL NO.
25	Indicator	25

ABBR: IND

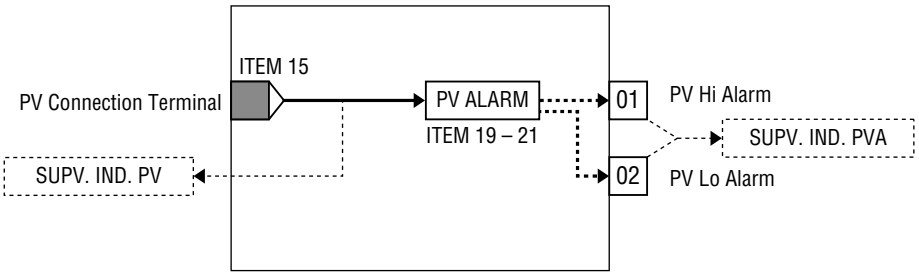

GROUP [02, 03] ◆: Automatically changeable parameters ★: Setting data

	ITEM	MDFY	DATA INPUT	DISPLAY (e.g.)	CONTENTS
	01	●	(always modifiable)		■ MAINTENANCE SWITCH (lock command)
			0	MT: 0	MONITOR mode: data monitoring only
			1	MT: 1	PROGRAM mode: "▲" marked data modifiable
	02	IND	No input	ER: NN	Error indication (00: normal, 01 – 90: error)
★	**10**	▲	**25**	**MD: 25**	**INDICATOR (model)** '-' to clear.
PROCESS VALUE (PV)					
★	15	▲	GGNN	P#: 0221	PV connection terminal (error if not connected) GG: Group No. NN: terminal No.
	16	▲	-15.00 – 115.00 %	PV: NNN.NN	PV %
◆★	19	●	-15.00 – 115.00 %	PH: NNN.NN	PV high alarm setpoint
◆★	20	●	-15.00 – 115.00 %	PL: NNN.NN	PV low alarm setpoint
◆★	21	●	0.00 – 115.00 %	HS: NNN.NN	Hysteresis (deadband)
	22	▲	0, 1	01: N	PV high alarm
	23	▲	0, 1	02: N	PV low alarm
SUPERVISORY INDICATION USE					
★	80	▲	alphanumeric	TG: XXX X	Tag name (10 characters max.)
★	81	▲	alphanumeric	TC: XXXX X	Tag comment (16 characters max.)
★	82	▲	±32000	MH: 15000	Upper range (in engineering unit)
★	83	▲	±32000	ML: 0	Lower range (in engineering unit)
★	84	▲	0, 1, 2, 3, 4, 5	DP: 1	Decimal point position (from rightmost digit)
★	85	▲	alphanumeric	TU: XXX X	Engineering unit (8 characters max.)

MODEL NO.	BLOCK NAME	MODEL NO.
31	Di Receive Terminal	31

ABBR: CDI

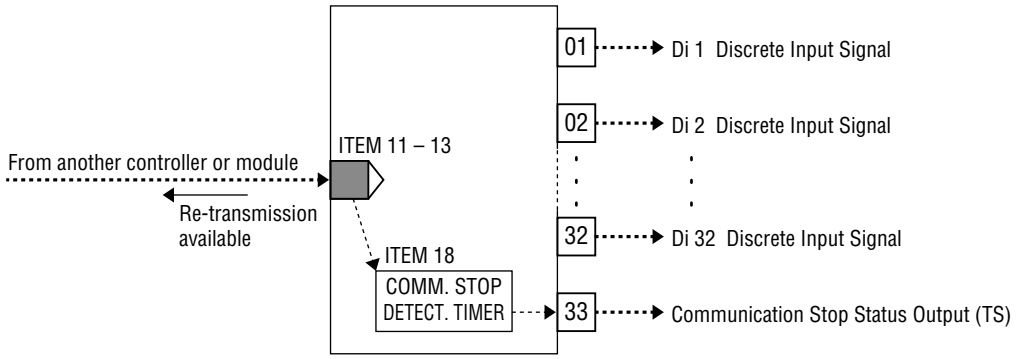

General Description

Used to receive discrete contact signals from other control cards, remote I/O devices and/or PC.

- Received contact state can be re-transmitted to the network.
- Signals can be remotely controlled with ON-OFF command from Sequential Control block when ITEM 11 is set to 'FE' (Sender is a PC).

GROUP [11 – 26] ★: Setting data

ITEM	MDFY	DATA INPUT	DISPLAY (e.g.)	CONTENTS
01	●	(always modifiable)		■ MAINTENANCE SWITCH (lock command)
		0	MT: 0	MONITOR mode: data monitoring only
		1	MT: 1	PROGRAM mode: "▲" marked data modifiable
		S	MT: S	SIMULATION mode: "❄" marked data modifiable
02	IND	No input	ER: NN	Error indication (00: normal, 01 – 90: error)
★ **10**	▲	**31**	**MD: 31**	**Di RECEIVE TERMINAL (model)** '-' to clear.
★ 11	▲	00 – 3F	S#: 1A	00 – 3F: sender station No.
		FE		FE: PC as sender
		FF		FF: sender within the same Nest Bus
★ 12	▲	0 – F	C#: 1	Sender card No.
★ 13	▲	11 – 26	G#: 11	Sender group No.
★ 18	▲	0.1 – 60.0 s	T: 1.0	Communication stop check time (no check when input from a PC)
★ 19	▲	0, 1	RT: N	Re-transmission (0: without, 1: with)
21	▲ ❄	0, 1	01: N	Di 1 discrete input signal
22	▲ ❄	0, 1	02: N	Di 2 discrete input signal
:	:	:	:	:
30	▲ ❄	0, 1	10: N	Di 10 discrete input signal
31	▲ ❄	0, 1	11: N	Di 11 discrete input signal
:	:	:	:	:
40	▲ ❄	0, 1	20: N	Di 20 discrete input signal
41	▲ ❄	0, 1	21: N	Di 21 discrete input signal
:	:	:	:	:
50	▲ ❄	0, 1	30: N	Di 30 discrete input signal
51	▲ ❄	0, 1	31: N	Di 31 discrete input signal
52	▲ ❄	0, 1	32: N	Di 32 discrete input signal
53	▲	0, 1	TS: N	Communication stop status indication (1: stop)

Remark: Be sure to perform a cold start on the device when the settings have been changed.

■ **Input from Do Send Terminal within the Same Nest Bus**

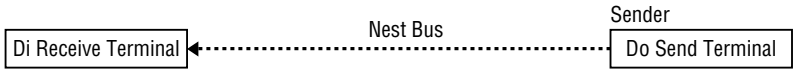

[Setting]

ITEM 11: FF	(Sender is within the same Nest Bus)
ITEM 12: 0 – F	(Sender card No.)
ITEM 13: 11 – 26	(Sender group No.)

■ **Input from Do Send Terminal on Remote Nest Bus**

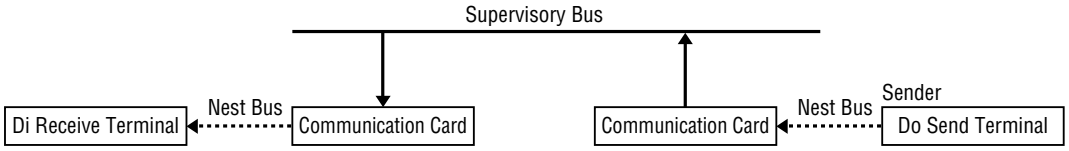

[Setting]

ITEM 11: 00 – 3F	(Sender station No.)
ITEM 12: 0 – F	(Sender card No.)
ITEM 13: 11 – 26	(Sender group No.)

■ **Input from PC**

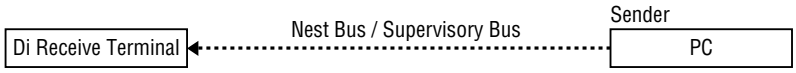

Specify ITEM 19 to '1' (re-transmission). The PC requires the setting to confirm feedback.

[Setting]

ITEM 11: FE	(Sender is a PC)
ITEM 12: any No.	(disregarded)
ITEM 13: any No.	(disregarded)
ITEM 18: any value	(disregarded)
ITEM 19: 1	(re-transmission)

MODEL NO.	BLOCK NAME	MODEL NO.
32	Do Send Terminal	32

ABBR: CDO

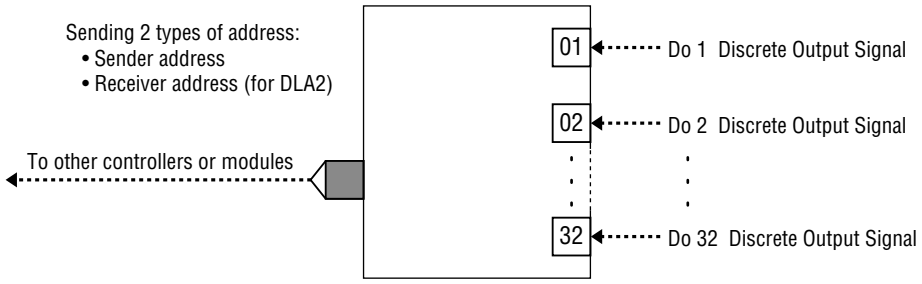

General Description

Used to send discrete contact signals to other control cards, remote I/O devices and/or PC.

• Sender address is automatically attached when transmitting.

GROUP [11 – 26] ★: Setting data

ITEM	MDFY	DATA INPUT	DISPLAY (e.g.)	CONTENTS
01	●	(always modifiable)		■ MAINTENANCE SWITCH (lock command)
		0	MT: 0	MONITOR mode: data monitoring only
		1	MT: 1	PROGRAM mode: "▲" marked data modifiable
		S	MT: S	SIMULATION mode: "❄" marked data modifiable
02	IND	No input	ER: NN	Error indication (00: normal, 01 – 90: error)
★ **10**	▲	**32**	**MD: 32**	**Do SEND TERMINAL (model)** '-' to clear.
★ 11	▲	0, 1, 2	TR: 0	Transmission range 0: within the same Nest Bus 1: also to supervisory network 2: no transmission
★ 12	▲			Receiver address (for DLA2 use)
		0	RM: 0	Not specified
		1	RM: 1	Specified (ITEM 13 – 17)
★ 13	▲	00 – 3F	S#: 10	Receiver station No.
★ 14	▲	0 – F	C#: 1	Receiver card No.
★ 15	▲	11 – 26	G#: 11	Receiver group No.
★ 16	▲	01 – 32	SN: 01	Top output point No. of the receiver
★ 17	▲	01 – 32	N: 32	Total number of points to be sent (counted from the top point No.)
21	▲ ❄	0, 1	01: N	Do 1 discrete output signal status indication
22	▲ ❄	0, 1	02: N	Do 2 discrete output signal status indication
:	:	:	:	:
30	▲ ❄	0, 1	10: N	Do 10 discrete output signal status indication
31	▲ ❄	0, 1	11: N	Do 11 discrete output signal status indication
:	:	:	:	:
40	▲ ❄	0, 1	20: N	Do 20 discrete output signal status indication
41	▲ ❄	0, 1	21: N	Do 21 discrete output signal status indication
:	:	:	:	:
50	▲ ❄	0, 1	30: N	Do 30 discrete output signal status indication
51	▲ ❄	0, 1	31: N	Do 31 discrete output signal status indication
52	▲ ❄	0, 1	32: N	Do 32 discrete output signal status indication

■ Sender Address

Sender address is automatically set. ITEM 10 (model), ITEM 11 (transmission range) and ITEM 12: '0' are the minimum required settings.

MODEL NO.	BLOCK NAME	MODEL NO.
33	Ai Receive Terminal	33

ABBR: CAI

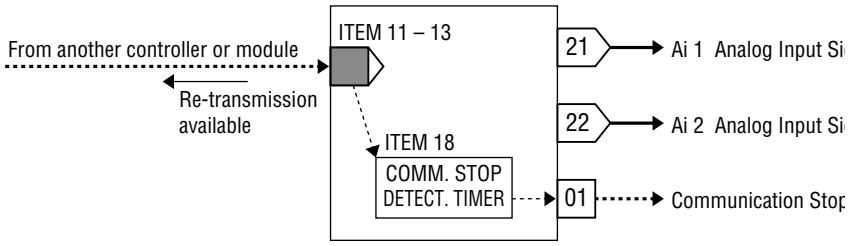

General Description

Used to receive analog or accumulated pulse signals from other control cards, remote I/O devices and/or PC.

- Received contact status can be re-transmitted to the network.
- Re-transmitted data can be received by an Ai Receive Terminal on other card No.

GROUP [11 – 26] ★: Setting data

ITEM	MDFY	DATA INPUT	DISPLAY (e.g.)	CONTENTS
01	●	(always modifiable)		■ MAINTENANCE SWITCH (lock command)
		0	MT: 0	MONITOR mode: data monitoring only
		1	MT: 1	PROGRAM mode: "▲" marked data modifiable
		S	MT: S	SIMULATION mode: "❄" marked data modifiable
02	IND	No input	ER: NN	Error indication (00: normal, 01 – 90: error)
★ **10**	▲	**33**	**MD: 33**	**Ai RECEIVE TERMINAL (model)** '-' to clear.
★ 11	▲	00 – 3F	S#: 1A	00 – 3F: sender station No.
		FE		FE: PC as sender
		FF		FF: sender within the same Nest Bus
★ 12	▲	0 – F	C#: 1	Sender card No.
★ 13	▲	11 – 26	G#: 11	Sender group No.
★ 18	▲	0.1 – 60.0 s	T: 1.0	Communication stop check time (no check when input from a PC)
★ 19	▲	0, 1	RT: N	Re-transmission (0: without, 1: with)
21	▲ ❄	-15.00 – 115.00 %	21: NNN.NN	Ai 1 analog input signal
22	▲ ❄	-15.00 – 115.00 %	22: NNN.NN	Ai 2 analog input signal
23	▲	0, 1	TS: N	Communication stop status indication (1: stop)

Remark: Be sure to perform a cold start on the device when the settings have been changed.

■ **Input from Ao Send Terminal within the Same Nest Bus**

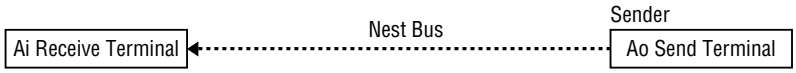

[Setting]

ITEM 11: FF (Sender is within the same Nest Bus)
ITEM 12: 0 – F (Sender card No.)
ITEM 13: 11 – 26 (Sender group No.)

■ **Input from Ao Send Terminal on Remote Nest Bus**

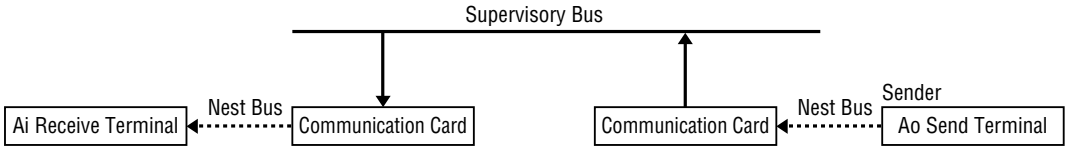

[Setting]

ITEM 11: 00 – 3F (Sender station No.)
ITEM 12: 0 – F (Sender card No.)
ITEM 13: 11 – 26 (Sender group No.)

■ **Input from PC**: Same as explained for Di Receive Terminal

MODEL NO.	BLOCK NAME	MODEL NO.
34	Ao Send Terminal	34

ABBR: CAO

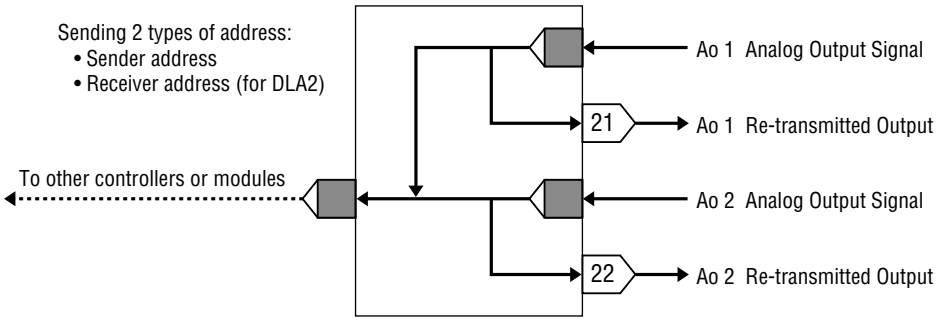

General Description

Used to send analog or accumulated pulse signals to other control cards, remote I/O devices and PC.

• Sender address is automatically attached.

GROUP [11 – 26] ★: Setting data

ITEM	MDFY	DATA INPUT	DISPLAY (e.g.)	CONTENTS
01	●	(always modifiable)		■ MAINTENANCE SWITCH (lock command)
		0	MT: 0	MONITOR mode: data monitoring only
		1	MT: 1	PROGRAM mode: "▲" marked data modifiable
		S	MT: S	SIMULATION mode: "❄" marked data modifiable
02	IND	No input	ER: NN	Error indication (00: normal, 01 – 90: error)
★ **10**	▲	**34**	**MD: 34**	**Ao SEND TERMINAL (model)** '-' to clear.
★ 11	▲	0, 1, 2	TR: 0	Transmission range 0: within the same Nest Bus 1: also to supervisory network 2: no transmission
★ 12	▲			Receiver address (for DLA2 use)
		0	RM: 0	Not specified
		1	RM: 1	Specified (ITEM 13 – 15)
★ 13	▲	00 – 3F	S#: 10	Station No. of the receiver
★ 14	▲	0 – F	C#: 1	Card No. of the receiver
★ 15	▲	11 – 26	G#: 11	Group No. of the receiver
★ 18	▲	GGNN	1#: 3421	Ao 1 connection terminal (error if not connected)
★ 19	▲	GGNN	2#: 4621	Ao 2 connection terminal (no connection allowed)
21	▲ ❄	-15.00 – 115.00 %	A1: NNN.NN	Ao 1 analog output signal
22	▲ ❄	-15.00 – 115.00 %	A2: NNN.NN	Ao 2 analog output signal

■ Sender Address

Sender address is automatically set when transmitting. ITEM 10 (model), ITEM 11 (transmission range) and ITEM 12: '0' are the minimum required settings.

MODEL NO.	BLOCK NAME	MODEL NO.
44	Discrete Contact Input / Accumulated Value Output	44

ABBR: QIP

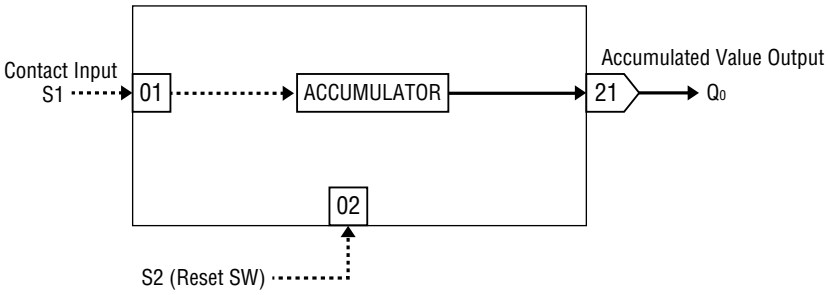

General Description

Used to count number of rising edge of discrete contact input and converts into accumulated value. Contact input is supplied through Sequential Control Program block.

Application

Using discrete contact input signals in place of pulse train input signals to count.
Maximum pulse rate must be at least twice as greater as the control cycle (GROUP 00, ITEM 11).

COMPUTATION CYCLE (GROUP 00, ITEM 11)	MAXIMUM PULSE RATE	
0.25 sec	2 pulses/sec	(7200 pulses/h)
0.5 sec	1 pulse/sec	(3600 pulses/h)
1.0 sec	0.5 pulses/sec	(1800 pulses/h)

Operation

Counting from 0 up to 9999 is repeated and accumulated value is output.
Internal counter is reset when Reset SW S2 is turned to '1'.
S2 is set to '1' at default setting.

GROUP [30 – 61] ★: Setting data

ITEM	MDFY	DATA INPUT	DISPLAY (e.g.)	CONTENTS
01	●	(always modifiable)		■ MAINTENANCE SWITCH (lock command)
		0	MT: 0	MONITOR mode: data monitoring only
		1	MT: 1	PROGRAM mode: "▲" marked data modifiable
02	IND	No input	ER: NN	Error indication (00: normal, 01 – 90: error)
03	▲	0 – 9999	MC: NNNN	Q_0 Accumulated value
04	▲	0, 1	S1: N	S1 Discrete input
05	▲	0, 1	S2: N	S2 Reset SW input (1: reset)
★ **10**	▲	**44**	**MD: 44**	**DISCRETE CONTACT INPUT / ACCUMULATED VALUE OUTPUT (model)** '-' to clear.

MODEL NO.	BLOCK NAME	MODEL NO.
45	Pulse Adder	45

ABBR: PAD

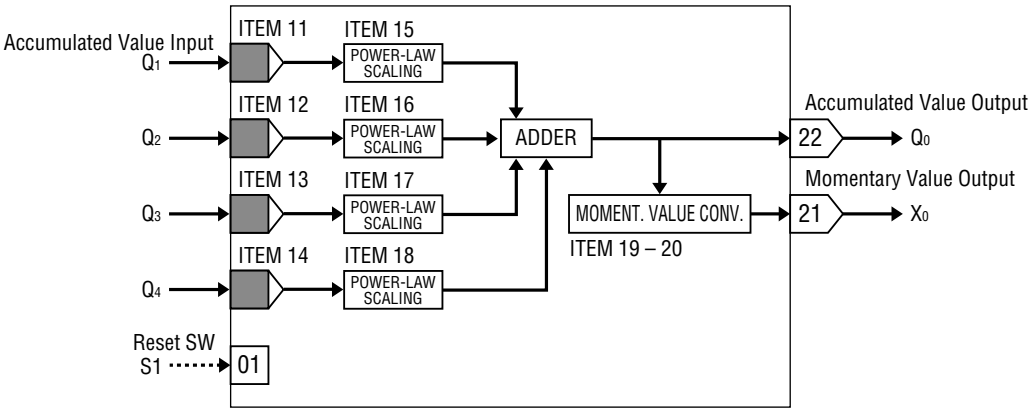

General Description

Used to add accumulated pulse inputs through 4 channels.
Each input can be scaled from 10 down to 0.001 times to adjust weight difference.
Internal counter is reset when Reset SW S1 is turned to '1'.
S1 is set to '1' at default setting.

GROUP [30 – 61] ★: Setting data

ITEM	MDFY	DATA INPUT	DISPLAY (e.g.)	CONTENTS
01	●	(always modifiable)		■ MAINTENANCE SWITCH (lock command)
		0	MT: 0	MONITOR mode: data monitoring only
		1	MT: 1	PROGRAM mode: "▲" marked data modifiable
02	IND	No input	ER: NN	Error indication (00: normal, 01 – 90: error)
03	▲	0.00 – 115.00 %	21: NNN.NN	X_0 Momentary value output
04	▲	0 – 9999	22: NNNN	Q_0 Accumulated value output
05	▲	0, 1	S1: N	S1 Reset SW (1: reset)
★ **10**	▲	**45**	**MD: 45**	**PULSE ADDER (model)** '-' to clear.
★ 11	▲	GGNN	1#: 1221	Q_1 connection terminal (error if not connected) GG: Group No. NN: terminal No.
★ 12	▲	GGNN	2#: 1321	Q_2 connection terminal (no connection allowed)
★ 13	▲	GGNN	3#: 1421	Q_3 connection terminal (no connection allowed)
★ 14	▲	GGNN	4#: 1521	Q_4 connection terminal (no connection allowed)
★ 15	▲	1, 0, -1, -2, -3	D1: -1	Q_1 power-law scaling
★ 16	▲	1, 0, -1, -2, -3	D2: -1	Q_2 power-law scaling
★ 17	▲	1, 0, -1, -2, -3	D3: -1	Q_3 power-law scaling
★ 18	▲	1, 0, -1, -2, -3	D4: -1	Q_4 power-law scaling (10^X X = 1: x10, 0: x1, -1: x0.1, -2: x0.01, -3:x0.001)
★ 19	▲	0.00 – 10000.00	VC: 1000.00	Momentary value conversion factor or scaling rate (number of pulses per second at 100% momentary value input)
★ 20	▲	1 – 16	VR: 1	Sample number for moving average in momentary value conversion

MODEL NO.	BLOCK NAME	MODEL NO.
46	Pulse/Analog Multiplication	46

ABBR: QAM

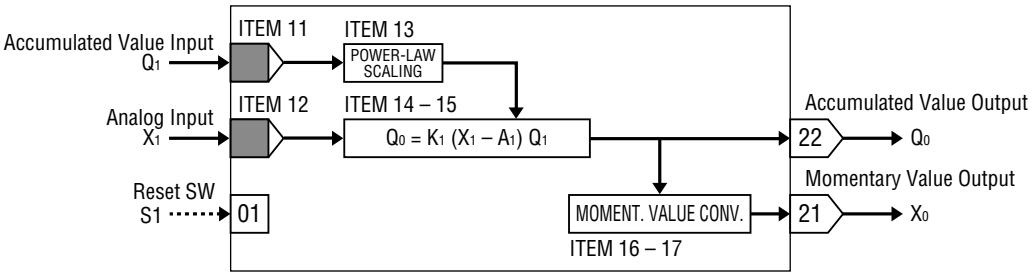

General Description

Used to multiply accumulated pulse input by analog input.
Internal counter is reset when Reset SW S1 is turned to '1'.
S1 is set to '1' at default setting.

GROUP [30 – 61] ★: Setting data

ITEM	MDFY	DATA INPUT	DISPLAY (e.g.)	CONTENTS
01	●	(always modifiable)		■ MAINTENANCE SWITCH (lock command)
		0	MT: 0	MONITOR mode: data monitoring only
		1	MT: 1	PROGRAM mode: "▲" marked data modifiable
02	IND	No input	ER: NN	Error indication (00: normal, 01 – 90: error)
03	▲	0.00 – 115.00 %	21: NNN.NN	X_0 Momentary value output
04	▲	0 – 9999	22: NNNN	Q_0 Accumulated value output
05	▲	0, 1	S1: N	S1 Reset SW (1: reset)
★ **10**	▲	**46**	**MD: 46**	**PULSE/ANALOG MULTIPLICATION (model)** '-' to clear.
★ 11	▲	GGNN	1#: 1221	Q_1 connection terminal (error if not connected) GG: Group No. NN: terminal No.
★ 12	▲	GGNN	2#: 1321	X_1 connection terminal (error if not connected)
★ 13	▲	1, 0, -1, -2, -3	PD: -1	Q_1 power-law scaling (10^X X = 1: x10, 0: x1, -1: x0.1, -2: x0.01, -3:x0.001)
★ 14	▲	0.000 – 32.000	K1: NN.NNN	K_1 Gain
★ 15	▲	±115.00 %	A1: NNN.NN	A_1 Bias
★ 16	▲	0.00 – 10000.00	VC: 1000.00	Momentary value conversion factor or scaling rate (number of pulses per second at 100% momentary value input)
★ 17	▲	1 – 16	VR: 1	Sample number for moving average in momentary value conversion

MODEL NO.	BLOCK NAME	MODEL NO.
47	Pulse Accumulator	47

ABBR: QSS

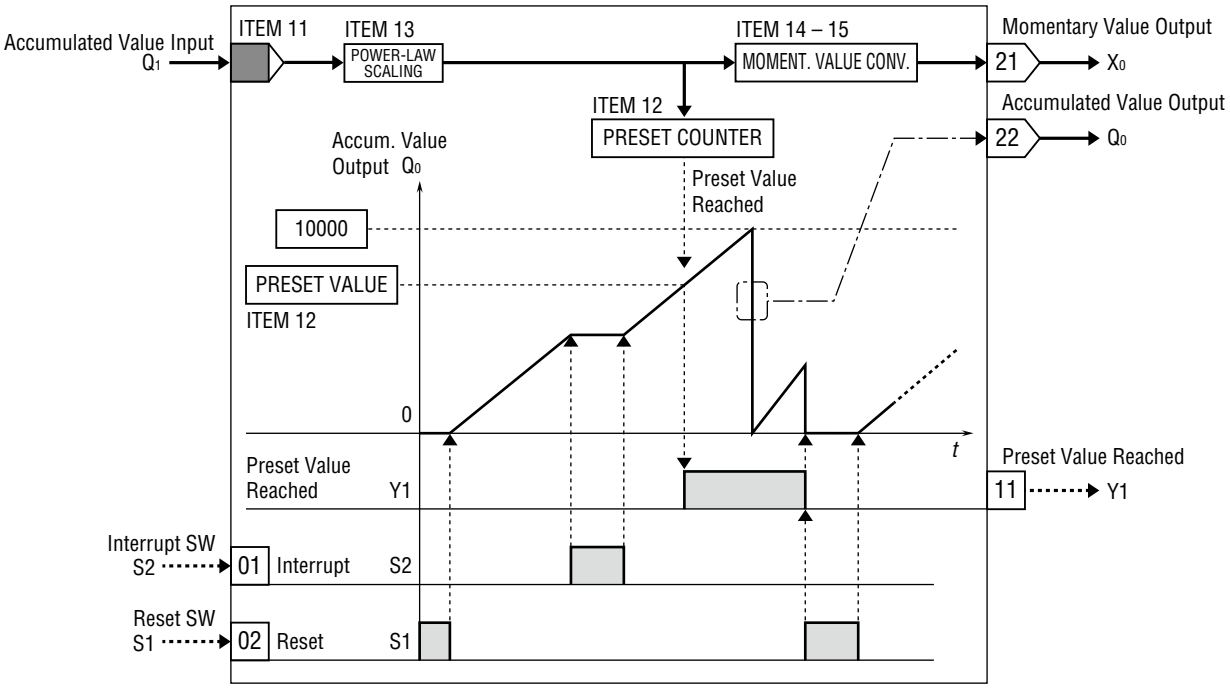

General Description

Preset counter for accumulated value input with single stage.

- No accumulation while Interrupt SW S2 is set to '1'.
- When Reset SW S1 is set to '1', counter value returns to zero, and 'Preset Value Reached' Output Y1 is turned to '0.'
- Accumulated Value Output Q_0 returns to 0 count at 10000 counts. Fractions are then added.

GROUP [30 – 61] ◆: Automatically changeable parameters ★: Setting data

ITEM	MDFY	DATA INPUT	DISPLAY (e.g.)	CONTENTS
01	●	(always modifiable)		■ MAINTENANCE SWITCH (lock command)
		0	MT: 0	MONITOR mode: data monitoring only
		1	MT: 1	PROGRAM mode: "▲" marked data modifiable
02	IND	No input	ER: NN	Error indication (00: normal, 01 – 90: error)
03	▲	0.00 – 115.00 %	21: NNN.NN	X_0 Momentary value output
04	▲	0 – 9999	22: NNNN	Q_0 Accumulated value output (When Q_0 is connected to analog input terminal of other function block, 9999 count becomes 99.99)
05	▲	0, 1	S1: N	S1 Reset SW (1: reset)
06	▲	0, 1	S2: N	S2 Interrupt SW (1: interrupt)
07	▲	0, 1	Y1: N	Y1 Preset value reached output
★ **10**	▲	**47**	**MD: 47**	**PULSE ACCUMULATOR (model)** '-' to clear.
★ 11	▲	GGNN	1#: 1221	Q_1 connection terminal (error if not connected) GG: Group No. NN: terminal No.
◆★ 12	▲	0 – 9999	PS: NNNN	PS Preset value
★ 13	▲	1, 0, -1, -2, -3	PD: -1	Q_1 power-law scaling (10^X X = 1: x10, 0: x1, -1: x0.1, -2: x0.01, -3:x0.001)
★ 14	▲	0.00 – 10000.00	VC: 1000.00	Momentary value conversion parameter or scaling rate (number of pulses per second at 100% momentary value input)
★ 15	▲	1 – 16	VR: 1	Sample number for moving average in momentary value conversion

MODEL NO.	BLOCK NAME	MODEL NO.
48	Pulse Input / Discrete Contact Output	48

ABBR: QPO

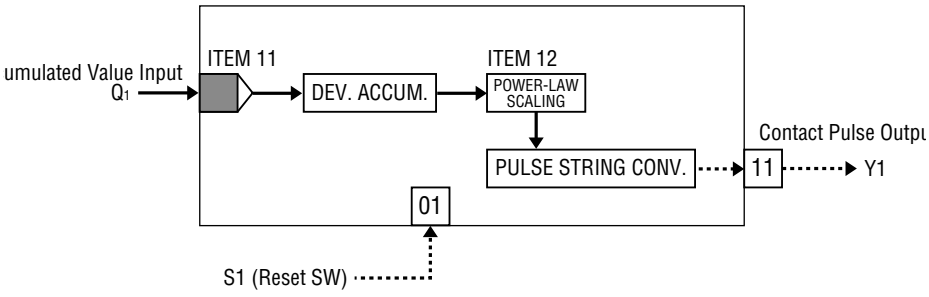

General Description

Used to convert accumulated value input into contact pulses. Send the converted signals to Sequential Control Program block to output to a specific location.

Operation

Pulse count added since last computation cycle is accumulated.
Contact is turned on and off until the accumulated value reaches '0'.
With Reset SW input, the input is stored in memory until next cycle.

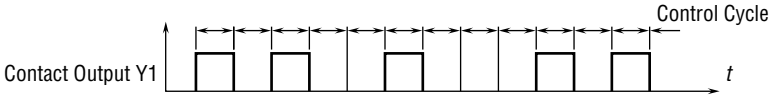

- Minimum pulse cycle is twice as wide as the computation cycle (GROUP 00, ITEM 11). For example, with the cycle set to 0.5 second, 1 pulse/second is the fastest cycle.
- Change 'Power-Law Scaling' setting so that the accumulated difference is to be cleared with the maximum pulse rate.
- The internal counter is reset when Reset SW S1 is turned to '1'.

S1 is set to '1' at default setting.

Remark

The maximum pulse count is limited to 9999.

GROUP [30 – 61] ★: Setting data

ITEM	MDFY	DATA INPUT	DISPLAY (e.g.)	CONTENTS
01	●	(always modifiable)		■ MAINTENANCE SWITCH (lock command)
		0	MT: 0	MONITOR mode: data monitoring only
		1	MT: 1	PROGRAM mode: "▲" marked data modifiable
02	IND	No input	ER: NN	Error indication (00: normal, 01 – 90: error)
03	▲	0, 1	S1: N	S1 Reset SW (0: count, 1: reset)
04	▲	0, 1	Y1: N	Y1 Accumulated pulse output
★ **10**	▲	**48**	**MD: 48**	**PULSE INPUT / DISCRETE CONTACT OUTPUT (model)** '-' to clear.
★ 11	▲	GGNN	1#: 0131	Q_1 connection terminal (error if not connected) GG: Group No. NN: terminal No.
★ 12	▲	0, -1, -2, -3	PD: -2	Q_1 power-law scaling (10^X X = 0: x1, -1: x0.1, -2: x0.01, -3: x0.001)

MODEL NO.	BLOCK NAME	MODEL NO.
49	Batch Program	49

ABBR: BPS

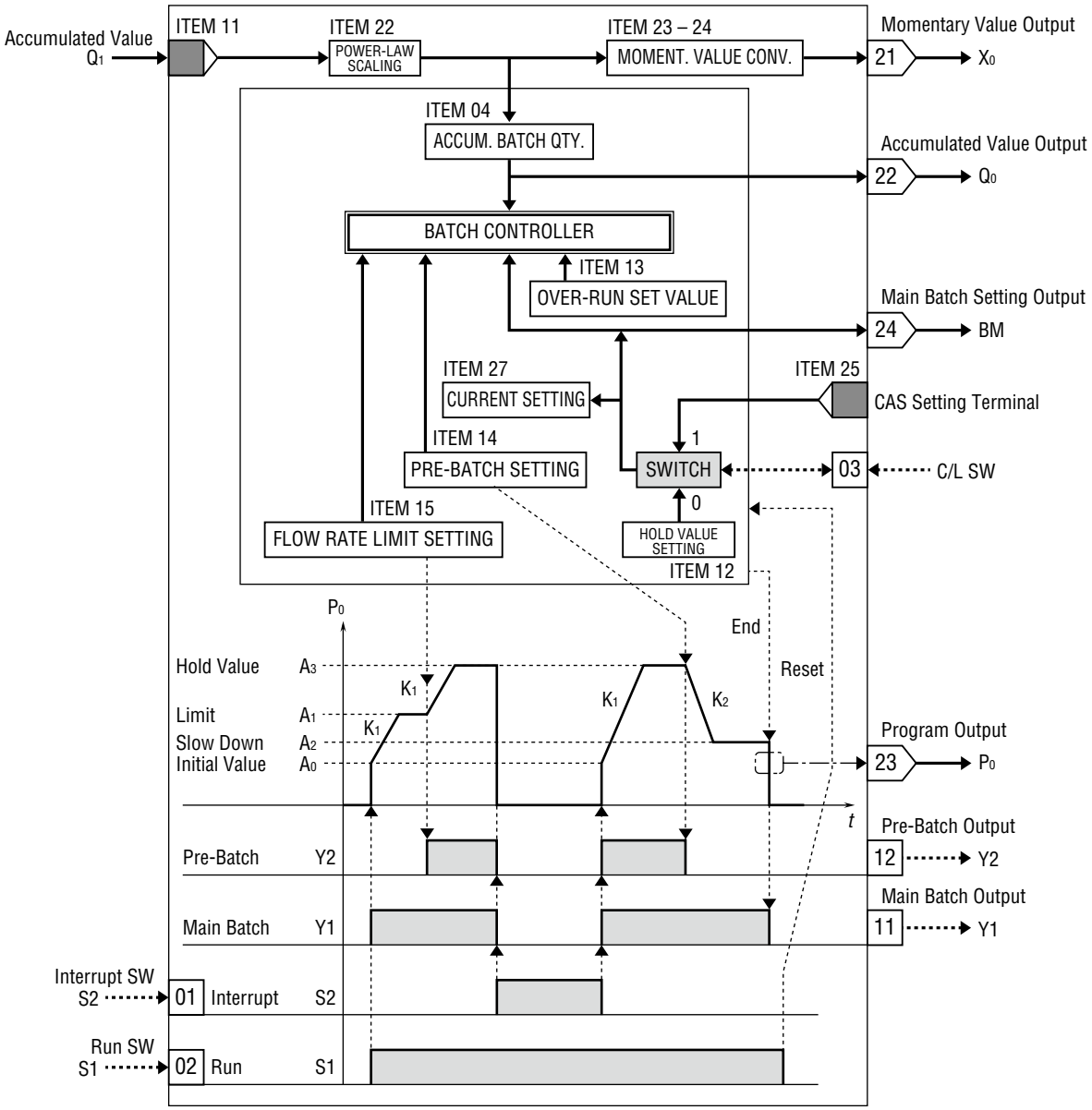

General Description

Two-stage batch programming is available. Pre-batch and main batch settings control contact and analog outputs.

- The main batch and CAS settings cannot be changed after measuring operation has been started.
- When Interrupt SW S2 is turned on, the discrete output is turned off and the analog output approaches 0% in a ramp rate K_2. When the SW is off, it returns to Hold Value A_3 in a ramp rate K_1.
- The Run SW S1 must be turned off to restart.
- For the pre-batch setting, set a count number to be subtracted from the main batch setting.
- Accumulated value output and main batch output are reset with Run SW turned off.

GROUP [62 – 69] ◆: Automatically changeable parameters ★: Setting data

ITEM	MDFY	DATA INPUT	DISPLAY (e.g.)	CONTENTS
01	●	(always modifiable)		■ MAINTENANCE SWITCH (lock command)
		0	MT: 0	MONITOR mode: data monitoring only
		1	MT: 1	PROGRAM mode: "▲" marked data modifiable
02	IND	No input	ER: NN	Error indication (00: normal, 01 – 90: error)
03	▲	0.00 – 115.00 %	21: NNN.NN	X_0 Momentary value output
04	▲	0 – 9999	22: NNNN	Q_0 Accumulated value output
05	▲	-15.00 – 115.00 %	23: NNN.NN	P_0 Program output
06	▲	0, 1	S1: N	S1 Run SW (0: reset, 1: run)
07	▲	0, 1	S2: N	S2 Interrupt SW (1: interrupt)
08	▲	0, 1	Y1: N	Y1 Main batch output
09	▲	0, 1	Y2: N	Y2 Pre-batch output
★ **10**	▲	**49**	**MD: 49**	**BATCH PROGRAM (model)** '-' to clear.
★ 11	▲	GGNN	1#: 1221	Q_1 connection terminal (error if not connected) GG: Group No. NN: terminal No.
◆★12	▲	0 – 9999	BM: NNNN	BM Main batch setting output
◆★13	▲	0 – 9999	BO: NNNN	BO Overrun value (to be subtracted from BM)
◆★14	▲	0 – 9999	BP: NNNN	BP Pre-batch (to be subtracted from BM)
◆★15	▲	0 – 9999	BI: NNNN	BI Flow rate limit
◆★16	▲	0.00 – 115.00 %	A0: NNN.NN	A_0 Initial value (momentary value)
◆★17	▲	0.00 – 115.00 %	A1: NNN.NN	A_1 Flow rate limit (momentary value)
◆★18	▲	0.00 – 115.00 %	A2: NNN.NN	A_2 Slow-down value (momentary value)
◆★19	▲	0.00 – 115.00 %	A3: NNN.NN	A_3 Hold value (momentary value)
◆★20	▲	0.00 – 100.00 %/s	K1: NNN.NN	K_1 Up-ramp rate
◆★21	▲	0.00 – 100.00 %/s	K2: NNN.NN	K_2 Down-ramp rate
★ 22	▲	1, 0, -1, -2, -3	PD: -1	Q_1 power-law scaling (10^X X = 1: x10, 0: x1, -1: x0.1, -2: x0.01, -3: x0.001)
★ 23	▲	0.00 – 10000.00	XC: 1000.00	Momentary value conversion parameter or scaling rate (number of pulses per second at 100% momentary value input)
★ 24	▲	1 – 16	XP: 1	Sample number for moving average in momentary value conversion
★ 25	▲	GGNN	C#: 1221	CAS connection terminal GG: Group No. NN: terminal No.
◆ 26	▲	0, 1	03: N	C/L SW (0: local, 1: cascade)
27	IND		SP: NNNN	Current SP (0 – 9999, in actual engineering unit)

MODEL NO.	BLOCK NAME	MODEL NO.
51	Addition / Subtraction	51

ABBR: ADS

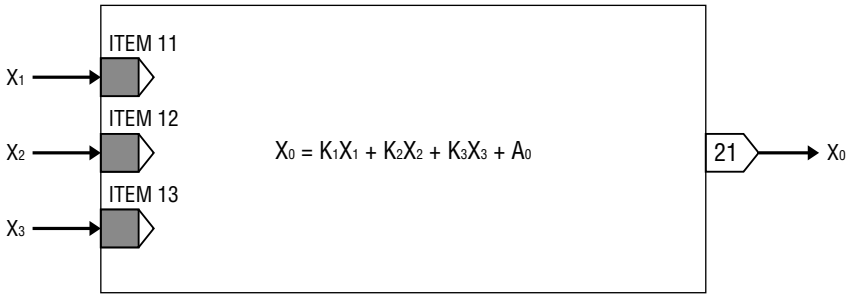

General Description: Addition by 3 inputs.

GROUP [30 – 61] ◆: Automatically changeable parameters ★: Setting data

ITEM	MDFY	DATA INPUT	DISPLAY (e.g.)	CONTENTS
01	●	(always modifiable)		■ MAINTENANCE SWITCH (lock command)
		0	MT: 0	MONITOR mode: data monitoring only
		1	MT: 1	PROGRAM mode: "▲" marked data modifiable
02	IND	No input	ER: NN	Error indication (00: normal, 01 – 90: error)
03	▲	approx. ±327 %	21: NNN.NN	X_0 Output
07	▲	approx. ±327 %	X1: NNN.NN	X_1 Input
08	▲	approx. ±327 %	X2: NNN.NN	X_2 Input
09	▲	approx. ±327 %	X3: NNN.NN	X_3 Input
★ **10**	▲	**51**	**MD: 51**	**ADDITION / SUBTRACTION (model)** '-' to clear.
★ 11	▲	GGNN	1#: 1221	X_1 connection terminal (error if not connected) GG: Group No. NN: terminal No.
★ 12	▲	GGNN	2#: 2221	X_2 connection terminal (no connection allowed)
★ 13	▲	GGNN	3#: 2321	X_3 connection terminal (no connection allowed)
◆★14	▲	±10.000	K1: NN.NNN	K_1 Gain
◆★15	▲	±10.000	K2: NN.NNN	K_2 Gain
◆★16	▲	±10.000	K3: NN.NNN	K_3 Gain
◆★17	▲	±115.00 %	A0: 1.50	A_0 Bias

Remark 1: Internal calculation employs 4-digit binary computation.
Remark 2: The block accepts input ranging from -327.68 through +327.67% (maximum range available for 2-digit binary computation). When the input value goes above or below this range, the output remains -327.68% or +327.67% and ITEM 02 indicates '11', error status.

MODEL NO.	BLOCK NAME	MODEL NO.
52	Multiplication	52

ABBR: MLT

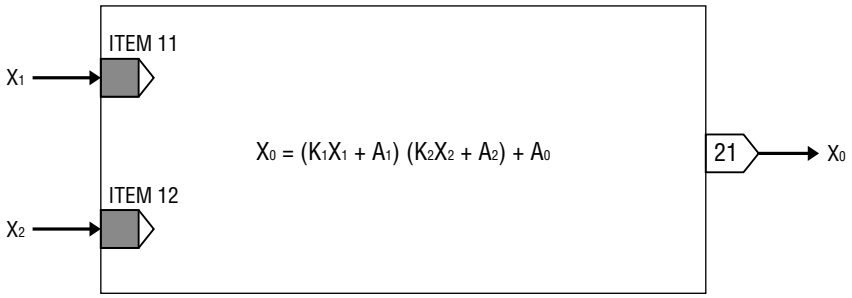

General Description: Multiplication by 2 inputs.

GROUP [30 – 61] ◆: Automatically changeable parameters ★: Setting data

ITEM	MDFY	DATA INPUT	DISPLAY (e.g.)	CONTENTS
01	●	(always modifiable)		■ MAINTENANCE SWITCH (lock command)
		0	MT: 0	MONITOR mode: data monitoring only
		1	MT: 1	PROGRAM mode: "▲" marked data modifiable
02	IND	No input	ER: NN	Error indication (00: normal, 01 – 90: error)
03	▲	approx. ±327 %	21: NNN.NN	X_0 Output
07	▲	approx. ±327 %	X1: NNN.NN	X_1 Input
08	▲	approx. ±327 %	X2: NNN.NN	X_2 Input
★ **10**	▲	**52**	**MD: 52**	**MULTIPLICATION (model)** '-' to clear.
★ 11	▲	GGNN	1#: 1221	X_1 connection terminal (error if not connected) GG: Group No. NN: terminal No.
★ 12	▲	GGNN	2#: 2221	X_2 connection terminal (no connection allowed)
◆★13	▲	±10.000	K1: NN.NNN	K_1 Gain
◆★14	▲	±10.000	K2: NN.NNN	K_2 Gain
◆★15	▲	±115.00 %	A0: 1.50	A_0 Bias
◆★16	▲	±115.00 %	A1: 1.50	A_1 Bias
◆★17	▲	±115.00 %	A2: 1.50	A_2 Bias

Remark 1: Internal calculation employs 4-digit binary computation.

Remark 2: The block accepts input ranging from -327.68 through +327.67% (maximum range available for 2-digit binary computation). When the input value goes above or below this range, the output remains -327.68% or +327.67% and ITEM 02 indicates '11', error status.

MODEL NO.	BLOCK NAME	MODEL NO.
53	Division	53

ABBR: DVD

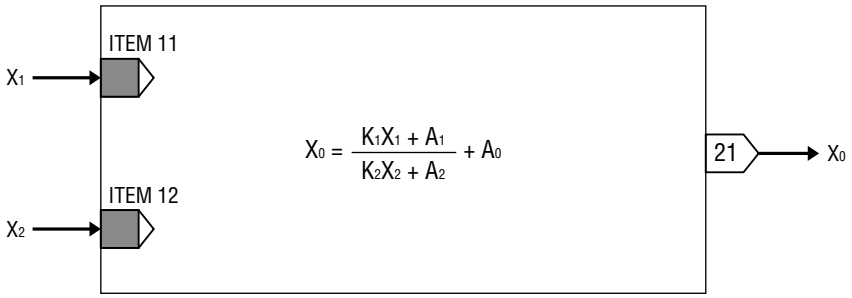

General Description: Division by 2 inputs.

GROUP [30 – 61] ◆: Automatically changeable parameters ★: Setting data

ITEM	MDFY	DATA INPUT	DISPLAY (e.g.)	CONTENTS
01	●	(always modifiable)		■ MAINTENANCE SWITCH (lock command)
		0	MT: 0	MONITOR mode: data monitoring only
		1	MT: 1	PROGRAM mode: "▲" marked data modifiable
02	IND	No input	ER: NN	Error indication (00: normal, 01 – 90: error)
03	▲	approx. ±327 %	21: NNN.NN	X_0 Output
07	▲	approx. ±327 %	X1: NNN.NN	X_1 Input
08	▲	approx. ±327 %	X2: NNN.NN	X_2 Input
★ **10**	▲	**53**	**MD: 53**	**DIVISION (model)** '-' to clear.
★ 11	▲	GGNN	1#: 1221	X_1 connection terminal (error if not connected) GG: Group No. NN: terminal No.
★ 12	▲	GGNN	2#: 2221	X_2 connection terminal (no connection allowed)
◆★13	▲	±10.000	K1: NN.NNN	K_1 Gain
◆★14	▲	±10.000	K2: NN.NNN	K_2 Gain
◆★15	▲	±115.00 %	A0: 1.50	A_0 Bias
◆★16	▲	±115.00 %	A1: 1.50	A_1 Bias
◆★17	▲	±115.00 %	A2: 1.50	A_2 Bias

Remark 1: Internal calculation employs 4-digit binary computation.
Remark 2: The block accepts input ranging from -327.68 through +327.67% (maximum range available for 2-digit binary computation). When the input value goes above or below this range, the output remains -327.68% or +327.67% and ITEM 02 indicates '11', error status.

MODEL NO.	BLOCK NAME	MODEL NO.
54	Square Root Extractor	54

ABBR: SQR

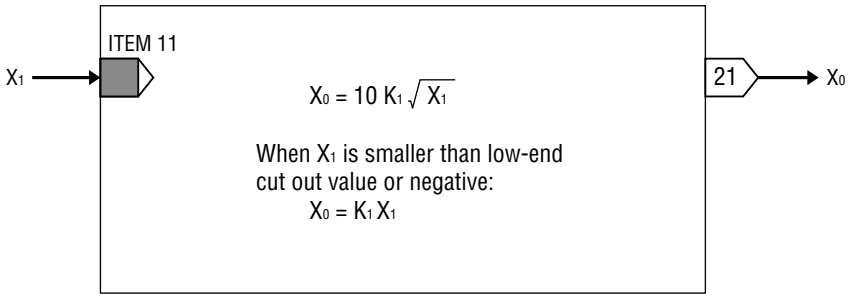

General Description

In order to extract square signal for a DP flowmeter, set $K_1 = 1$.
If you need to change signal span, change K_1 value.

GROUP [30 – 61] ◆: Automatically changeable parameters ★: Setting data

ITEM	MDFY	DATA INPUT	DISPLAY (e.g.)	CONTENTS
01	●	(always modifiable)		■ MAINTENANCE SWITCH (lock command)
		0	MT: 0	MONITOR mode: data monitoring only
		1	MT: 1	PROGRAM mode: "▲" marked data modifiable
02	IND	No input	ER: NN	Error indication (00: normal, 01 – 90: error)
03	▲	±115.00 %	21: NNN.NN	X_0 Output
07	▲	±115.00 %	X1: NNN.NN	X_1 Input
★ **10**	▲	**54**	**MD: 54**	**SQUARE ROOT EXTRACTOR (model)** '-' to clear.
★ 11	▲	GGNN	1#: 1221	X_1 connection terminal (error if not connected) GG: Group No. NN: terminal No.
◆★12	▲	±10.000	K1: NN.NNN	K_1 Gain
◆★13	▲	0.00 – 115.00 %	A1: NNN.NN	A_1 Input low-end cutout setting

MODEL NO.	BLOCK NAME	MODEL NO.
55	Absolute Value	55

ABBR: ABS

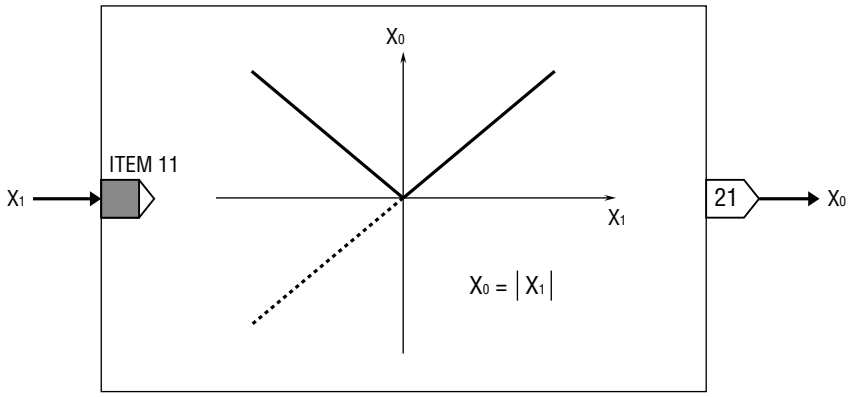

General Description: Used to output the absolute value of input signal.

GROUP [30 – 61] ★: Setting data

ITEM	MDFY	DATA INPUT	DISPLAY (e.g.)	CONTENTS
01	●	(always modifiable)		■ MAINTENANCE SWITCH (lock command)
		0	MT: 0	MONITOR mode: data monitoring only
		1	MT: 1	PROGRAM mode: "▲" marked data modifiable
02	IND	No input	ER: NN	Error indication (00: normal, 01 – 90: error)
03	▲	0.00 – 115.00 %	21: NNN.NN	X_0 Output
07	▲	±115.00 %	X1: NNN.NN	X_1 Input
★ **10**	▲	**55**	**MD: 55**	**ABSOLUTE VALUE (model)** '-' to clear.
★ 11	▲	GGNN	1#: 1221	X_1 connection terminal (error if not connected) GG: Group No. NN: terminal No.

MODEL NO.	BLOCK NAME	MODEL NO.
56	Non-Linear Gain, Deadband	56

ABBR: NLN

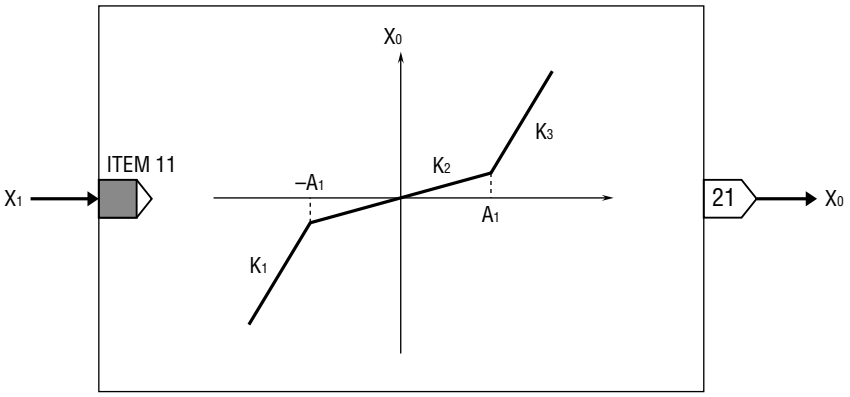

General Description

Typical application is a non-linear PID control. The output is connected to the input compensation terminal of the PID module in substitution method.

With K_2 = 0, deadband computation is available.

GROUP [30 – 61] ◆: Automatically changeable parameters ★: Setting data

ITEM	MDFY	DATA INPUT	DISPLAY (e.g.)	CONTENTS
01	●	(always modifiable)		■ MAINTENANCE SWITCH (lock command)
		0	MT: 0	MONITOR mode: data monitoring only
		1	MT: 1	PROGRAM mode: "▲" marked data modifiable
02	IND	No input	ER: NN	Error indication (00: normal, 01 – 90: error)
03	▲	±115.00 %	21: NNN.NN	X_0 Output
07	▲	±115.00 %	X1: NNN.NN	X_1 Input
★ **10**	▲	**56**	**MD: 56**	**NON-LINEAR GAIN, DEADBAND (model)** '-' to clear.
★ 11	▲	GGNN	1#: 1221	X_1 connection terminal (error if not connected) GG: Group No. NN: terminal No.
◆★12	▲	±10.000	K1: NN.NNN	K_1 Gain
◆★13	▲	±10.000	K2: NN.NNN	K_2 Gain
◆★14	▲	±10.000	K3: NN.NNN	K_3 Gain
◆★15	▲	0.00 – 115.00 %	A1: 1.50	A_1 Segment point

MODEL NO.	BLOCK NAME	MODEL NO.
57	Low-end Cutout	57

ABBR: DRP

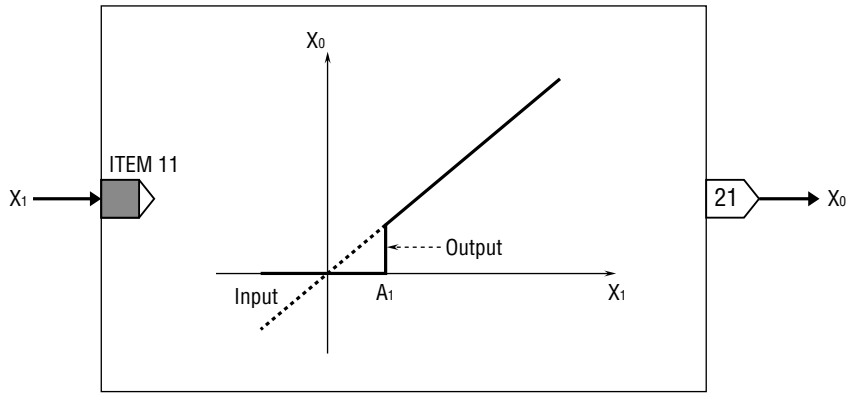

General Description: Used to forcibly output 0% when input signal goes below a setpoint.

GROUP [30 – 61] ◆: Automatically changeable parameters ★: Setting data

ITEM	MDFY	DATA INPUT	DISPLAY (e.g.)	CONTENTS
01	●	(always modifiable)		■ MAINTENANCE SWITCH (lock command)
		0	MT: 0	MONITOR mode: data monitoring only
		1	MT: 1	PROGRAM mode: "▲" marked data modifiable
02	IND	No input	ER: NN	Error indication (00: normal, 01 – 90: error)
03	▲	±115.00 %	21: NNN.NN	X_0 Output
07	▲	±115.00 %	X1: NNN.NN	X_1 Input
★ **10**	▲	**57**	**MD: 57**	**LOW-END CUTOUT (model)** '-' to clear.
★ 11	▲	GGNN	1#: 1221	X_1 connection terminal (error if not connected) GG: Group No. NN: terminal No.
◆ ★ 12	▲	0.00 – 115.00 %	A1: NNN.NN	A_1 Low-end cutout setting

MODEL NO.	BLOCK NAME	MODEL NO.
58	Segment Linearizer	58

ABBR: LIN

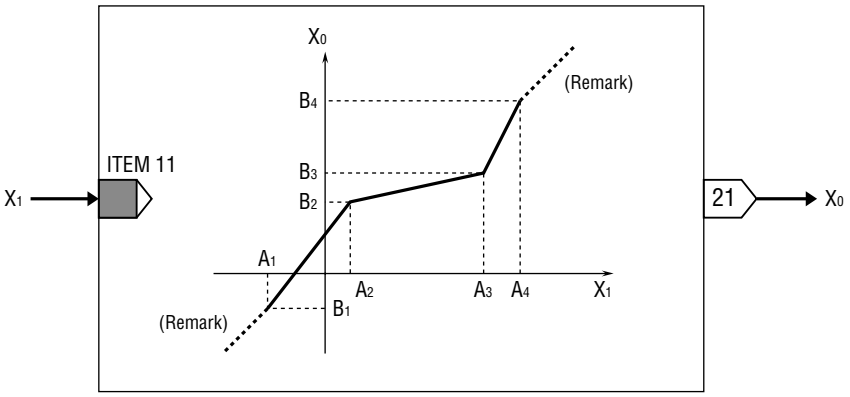

General Description

The output is approximated with 16 segments. SC 1.40

The output is approximated with 7 segments with SC Ver 1.40 or earlier.
Both input and output signals are operational from -115% through +115%. If you need more number of segments, connect two or more Linearizer modules in series. Set only necessary number of segment points and leave others blank.
Remark: Output range out of segment point setting is provided in a 45-degree incline (input gain = output gain).
$A_1 < A_2 < A_3 < A_4 < A_5 < A_6 < A_7 < .... < A_{16} < A_{17}$

GROUP [72 – 79] ◆: Automatically changeable parameters ★: Setting data

ITEM	MDFY	DATA INPUT	DISPLAY (e.g.)	CONTENTS
01	●	(always modifiable)		■ MAINTENANCE SWITCH (lock command)
		0	MT: 0	MONITOR mode: data monitoring only
		1	MT: 1	PROGRAM mode: "▲" marked data modifiable
02	IND	No input	ER: NN	Error indication (00: normal, 01 – 90: error)
03	▲	±115.00 %	21: NNN.NN	X_0 Output
07	▲	±115.00 %	X1: NNN.NN	X_1 Input
★ **10**	▲	**58**	**MD: 58**	**SEGMENT LINEARIZER (model)** '-' to clear.
★ 11	▲	GGNN	1#: 1221	X_1 connection terminal (error if not connected) GG: Group No. NN: terminal No.
◆★21	▲	±115.00 %	A1: NNN.NN	A_1 Input 1
◆★22	▲	±115.00 %	B1: NNN.NN	B_1 Output 1
◆★23	▲	±115.00 %	A2: NNN.NN	A_2 Input 2
◆★24	▲	±115.00 %	B2: NNN.NN	B_2 Output 2
◆★25	▲	±115.00 %	A3: NNN.NN	A_3 Input 3
◆★26	▲	±115.00 %	B3: NNN.NN	B_3 Output 3
◆★27	▲	±115.00 %	A4: NNN.NN	A_4 Input 4
◆★28	▲	±115.00 %	B4: NNN.NN	B_4 Output 4
◆★29	▲	±115.00 %	A5: NNN.NN	A_5 Input 5
◆★30	▲	±115.00 %	B5: NNN.NN	B_5 Output 5
◆★31	▲	±115.00 %	A6: NNN.NN	A_6 Input 6
◆★32	▲	±115.00 %	B6: NNN.NN	B_6 Output 6
◆★33	▲	±115.00 %	A7: NNN.NN	A_7 Input 7
◆★34	▲	±115.00 %	B7: NNN.NN	B_7 Output 7
◆★35	▲	±115.00 %	A8: NNN.NN	A_8 Input 8
◆★36	▲	±115.00 %	B8: NNN.NN	B_8 Output 8

ITEM	MDFY	DATA INPUT	DISPLAY (e.g.)	CONTENTS
◆★37	▲	±115.00 %	A9: NNN.NN	A_9 Input 9 SC 1.40
◆★38	▲	±115.00 %	B9: NNN.NN	B_9 Output 9 SC 1.40
◆★39	▲	±115.00 %	A10: NNN.NN	A_{10} Input 10 SC 1.40
◆★40	▲	±115.00 %	B10: NNN.NN	B_{10} Output 10 SC 1.40
◆★41	▲	±115.00 %	A11: NNN.NN	A_{11} Input 11 SC 1.40
◆★42	▲	±115.00 %	B11: NNN.NN	B_{11} Output 11 SC 1.40
◆★43	▲	±115.00 %	A12: NNN.NN	A_{12} Input 12 SC 1.40
◆★44	▲	±115.00 %	B12: NNN.NN	B_{12} Output 12 SC 1.40
◆★45	▲	±115.00 %	A13: NNN.NN	A_{13} Input 13 SC 1.40
◆★46	▲	±115.00 %	B13: NNN.NN	B_{13} Output 13 SC 1.40
◆★47	▲	±115.00 %	A14: NNN.NN	A_{14} Input 14 SC 1.40
◆★48	▲	±115.00 %	B14: NNN.NN	B_{14} Output 14 SC 1.40
◆★49	▲	±115.00 %	A15: NNN.NN	A_{15} Input 15 SC 1.40
◆★50	▲	±115.00 %	B15: NNN.NN	B_{15} Output 15 SC 1.40
◆★51	▲	±115.00 %	A16: NNN.NN	A_{16} Input 16 SC 1.40
◆★52	▲	±115.00 %	B16: NNN.NN	B_{16} Output 16 SC 1.40
◆★53	▲	±115.00 %	A17: NNN.NN	A_{17} Input 17 SC 1.40
◆★54	▲	±115.00 %	B17: NNN.NN	B_{17} Output 17 SC 1.40

■ Ramp Program Utilizing Segment Linearizer

When the Segment Linearizer and Accumulator blocks are combined as shown in the figure below, a ramp program can be realized.
If there are not enough calibration points in one Linearizer block, connect multiple Linearizer blocks in series.
Interrupt SW S2 in Accumulator block stops time signal.

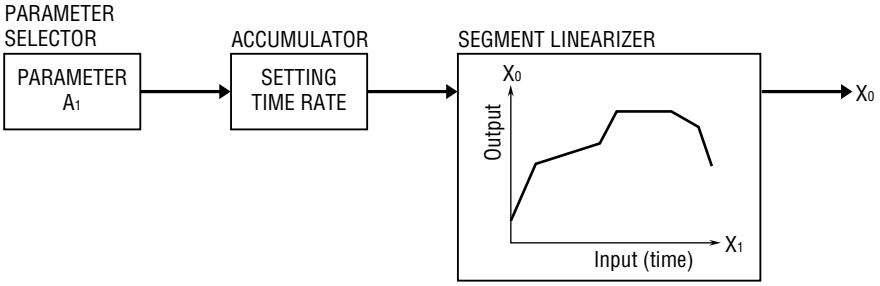

MODEL NO.	BLOCK NAME	MODEL NO.
59	Temperature/Pressure Compensation	59

ABBR: TCP

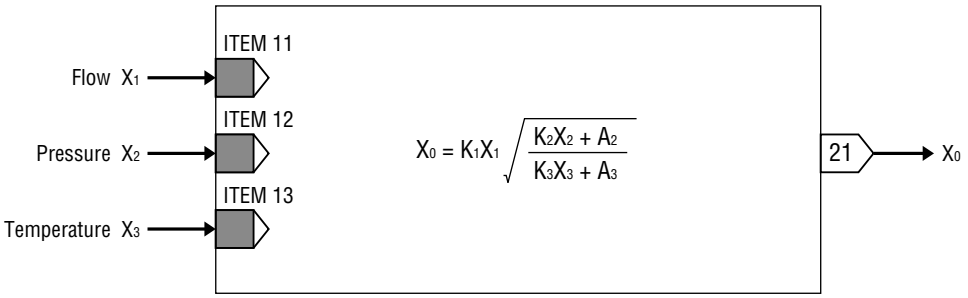

General Description

Used to execute temperature/pressure compensation for a gaseous flow. The flow signal X_1 must be linearized by Square Root Extractor before input.

Refer to the Function Block Application Manual to calculate gains and biases utilizing a normalization equation.

GROUP [30 – 61] ◆: Automatically changeable parameters ★: Setting data

ITEM	MDFY	DATA INPUT	DISPLAY (e.g.)	CONTENTS
01	●	(always modifiable)		■ MAINTENANCE SWITCH (lock command)
		0	MT: 0	MONITOR mode: data monitoring only
		1	MT: 1	PROGRAM mode: "▲" marked data modifiable
02	IND	No input	ER: NN	Error indication (00: normal, 01 – 90: error)
03	▲	±115.00 %	21: NNN.NN	X_0 Output
07	▲	±115.00 %	X1: NNN.NN	X_1 Flow input
08	▲	±115.00 %	X2: NNN.NN	X_2 Pressure input
09	▲	±115.00 %	X3: NNN.NN	X_3 Temperature input
★ **10**	▲	**59**	**MD: 59**	**TEMPERATURE/PRESSURE COMPENSATION (model)** '-' to clear.
★ 11	▲	GGNN	1#: 1221	X_1 Flow connection terminal (error if not connected) GG: Group No. NN: terminal No.
★ 12	▲	GGNN	2#: 2221	X_2 Pressure connection terminal (Remark 1)
★ 13	▲	GGNN	3#: 2321	X_3 Temperature connection terminal (Remark 1)
◆★14	▲	±10.000	K1: NN.NNN	K_1 Gain
◆★15	▲	±10.000	K2: NN.NNN	K_2 Gain
◆★16	▲	±10.000	K3: NN.NNN	K_3 Gain
◆★17	▲	±115.00 %	A2: 1.50	A_2 Bias
◆★18	▲	±115.00 %	A3: 1.50	A_3 Bias

Remark 1: When you need only either of pressure or temperature compensation, set '0000' to unused connection terminal and '100' % to unused bias (A_2 or A_3).

MODEL NO.	BLOCK NAME	MODEL NO.
17	Rate of Change Limit SC 1.50	17

ABBR: RCL

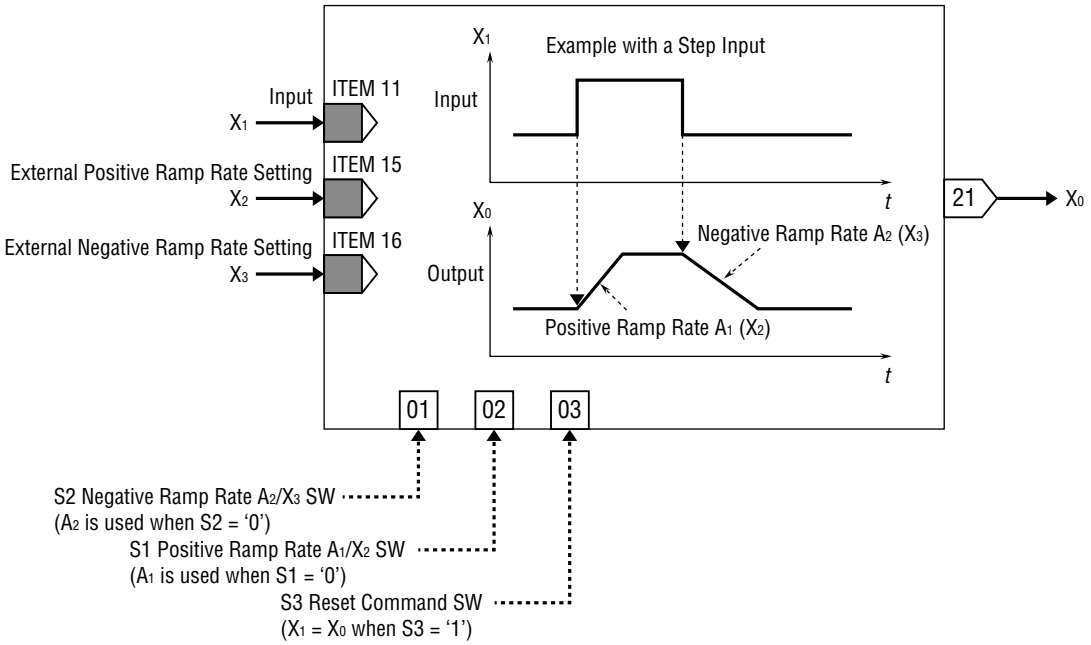

General Description

Used to limit input signal change within a negative ramp rate and a positive ramp rate.

- When the input change rate is slower than the setting, the block outputs the same value as the input.
- With the ramp rate set to "0", X_1 equals X_0.
- When X_2 or X_3 is not connected, parameters A_1 or A_2 is used.
- For the negative ramp rate A_2 or the external negative ramp rate X_3, set an absolute value (positive signal). If a negative signal is provided, X_1 equals X_0.

GROUP [30 – 61] ◆: Automatically changeable parameters ★: Setting data

ITEM	MDFY	DATA INPUT	DISPLAY (e.g.)	CONTENTS
01	●	(always modifiable)		■ MAINTENANCE SWITCH (lock command)
		0	MT: 0	MONITOR mode: data monitoring only
		1	MT: 1	PROGRAM mode: "▲" marked data modifiable
02	IND	No input	ER: NN	Error indication (00: normal, 01 – 90: error)
03	▲	±115.00 %	21: NNN.NN	X_0 Output
04	▲	-15.00 – 115.00 %	X1: NNN.NN	X_1 Input
05	▲	0.00 – 115.00 %/C	X2: NNN.NN	X_2 External positive ramp rate
06	▲	0.00 – 115.00 %/C	X3: NNN.NN	X_3 External negative ramp rate
07	▲	0, 1	S1: N	S1 Positive ramp rate A_1 / X_2 SW
08	▲	0, 1	S2: N	S2 Negative ramp rate A_2 / X_3 SW
09	▲	0, 1	S3: N	S3 Reset command SW (1: reset)
★ **10**	▲	**17**	**MD: 17**	**RATE OF CHANGE LIMIT (model)** '-' to clear.
★ 11	▲	GGNN	1#: 1221	X_1 connection terminal (error if not connected) GG: Group No. NN: terminal No.
◆★12	▲	0.00 – 115.00 %/C	A1: 3.50	A_1 Positive ramp rate
◆★13	▲	0.00 – 115.00 %/C	A2: 3.50	A_2 Negative ramp rate
★ 14	▲	0, 1	C: N	C Time unit (0: sec, 1: min)
★ 15	▲	GGNN	2#: 2221	X_2 connection terminal (no connection allowed)
★ 16	▲	GGNN	3#: 2321	X_3 connection terminal (no connection allowed)

MODEL NO.	BLOCK NAME	MODEL NO.
60	First Order Lag	60

ABBR: LAG

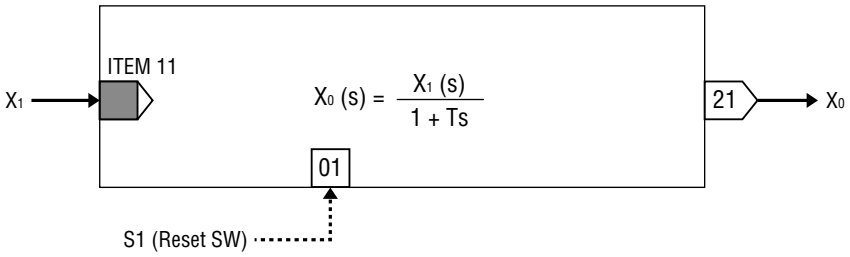

General Description

Used to reduce unwanted pulsation in an input signal.
When Reset SW S1 is "1", the output signal equals input.

GROUP [30 – 61] ◆: Automatically changeable parameters ★: Setting data

ITEM	MDFY	DATA INPUT	DISPLAY (e.g.)	CONTENTS
01	●	(always modifiable)		■ MAINTENANCE SWITCH (lock command)
		0	MT: 0	MONITOR mode: data monitoring only
		1	MT: 1	PROGRAM mode: "▲" marked data modifiable
02	IND	No input	ER: NN	Error indication (00: normal, 01 – 90: error)
03	▲	±115.00 %	21: NNN.NN	X_0 Output
04	▲	0, 1	S1: N	S1 Reset SW (1: reset)
07	▲	±115.00 %	X1: NNN.NN	X_1 Input
★ **10**	▲	**60**	**MD: 60**	**FIRST ORDER LAG (model)** '-' to clear.
★ 11	▲	GGNN	1#: 1221	X_1 connection terminal (error if not connected) GG: Group No. NN: terminal No.
◆ ★ 12	▲	0.0 – 100.0 s	T: NNN.N	T Time constant (0.0: no lag)

MODEL NO.	BLOCK NAME	MODEL NO.
61	First Order Lag with Two Time Constants	61

ABBR: 2LG

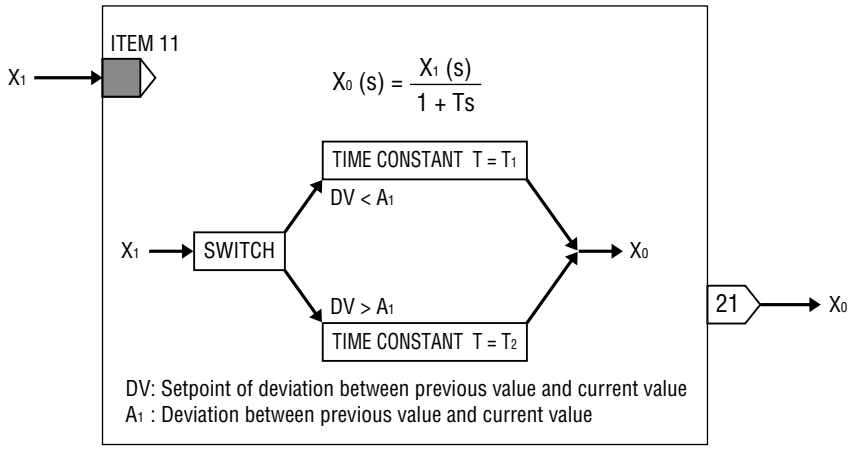

General Description

Used to reduce unwanted pulsation in an input signal.
With a large input change, the output signal tracks quickly; while with a small change, the larger filter function is selected.

Principle

The module compares an input sample from the last one. When the difference A_1 is smaller than the reference deviation setting DV, it chooses large time constant for sufficient buffer function. When the A_1 is larger than the DV, it chooses small time constant for better response time.

GROUP [30 – 61] ◆: Automatically changeable parameters ★: Setting data

ITEM	MDFY	DATA INPUT	DISPLAY (e.g.)	CONTENTS
01	●	(always modifiable)		■ MAINTENANCE SWITCH (lock command)
		0	MT: 0	MONITOR mode: data monitoring only
		1	MT: 1	PROGRAM mode: "▲" marked data modifiable
02	IND	No input	ER: NN	Error indication (00: normal, 01 – 90: error)
03	▲	±115.00 %	21: NNN.NN	X_0 Output
07	▲	±115.00 %	X1: NNN.NN	X_1 Input
★ **10**	▲	**61**	**MD: 61**	**FIRST ORDER LAG with Two Time Constants (model)** '-' to clear.
★ 11	▲	GGNN	1#: 1221	X_1 connection terminal (error if not connected) GG: Group No. NN: terminal No.
◆★12	▲	0.0 – 100.0 s	T1: NNN.N	T_1 Time constant used with larger deviation (0.0: no lag)
◆★13	▲	0.00 – 115.00 %	DV: NNN.NN	DV Deviation
◆★14	▲	0.0 – 100.0 s	T2: NNN.N	T_2 Time constant used with smaller deviation (0.0: no lag)

MODEL NO.	BLOCK NAME	MODEL NO.
62	Ramp Buffer	62

ABBR: RMP

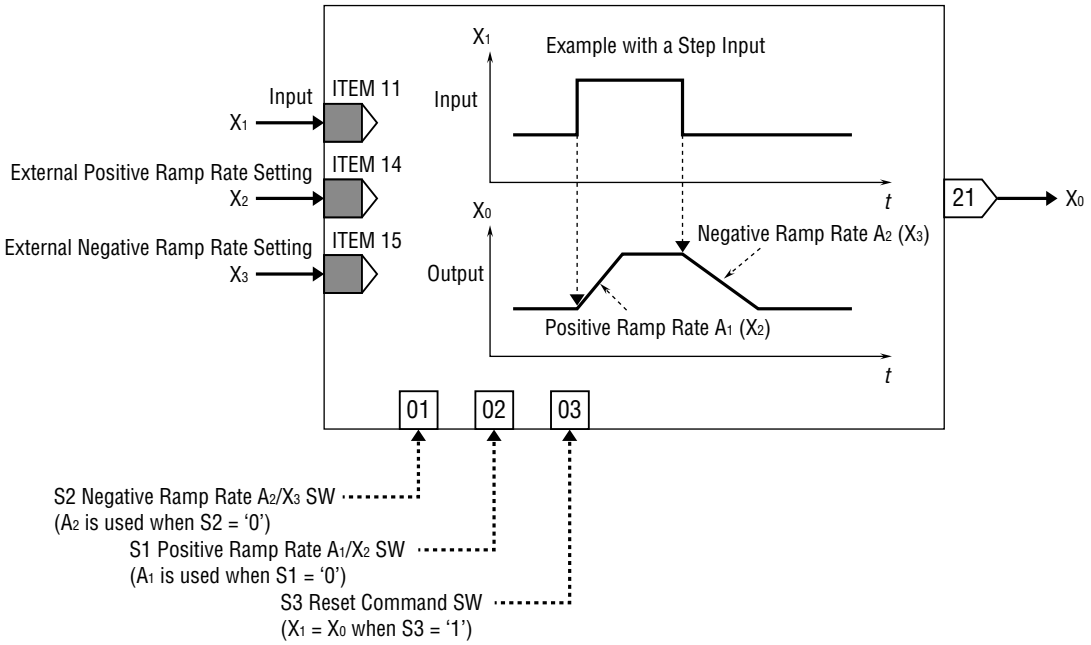

General Description

Used to limit input signal change within a negative ramp rate and a positive ramp rate.

- When the input change rate is slower than the setting, the block outputs the same value as the input.
- With the ramp rate set to "0", X_1 equals X_0.
- When X_2 or X_3 is not connected, parameters A_1 or A_2 is used.
- For the negative ramp rate A_2 or the external negative ramp rate X_3, set an absolute value (positive signal). If a negative signal is provided, X_1 equals X_0.

GROUP [30 – 61] ◆: Automatically changeable parameters ★: Setting data

ITEM	MDFY	DATA INPUT	DISPLAY (e.g.)	CONTENTS
01	●	(always modifiable)		■ MAINTENANCE SWITCH (lock command)
		0	MT: 0	MONITOR mode: data monitoring only
		1	MT: 1	PROGRAM mode: "▲" marked data modifiable
02	IND	No input	ER: NN	Error indication (00: normal, 01 – 90: error)
03	▲	±115.00 %	21: NNN.NN	X_0 Output
04	▲	-15.00 – 115.00 %	X1: NNN.NN	X_1 Input
05	▲	0.00 – 115.00 %/s	X2: NNN.NN	X_2 External positive ramp rate
06	▲	0.00 – 115.00 %/s	X3: NNN.NN	X_3 External negative ramp rate
07	▲	0, 1	S1: N	S1 Positive ramp rate A_1 / X_2 SW
08	▲	0, 1	S2: N	S2 Negative ramp rate A_2 / X_3 SW
09	▲	0, 1	S3: N	S3 Reset command SW (1: reset)
★ **10**	▲	**62**	**MD: 62**	**RAMP BUFFER (model)** '-' to clear.
★ 11	▲	GGNN	1#: 1221	X_1 connection terminal (error if not connected) GG: Group No. NN: terminal No.
◆★ 12	▲	0.00 – 115.00 %/s	A1: 3.50	A_1 Positive ramp rate
◆★ 13	▲	0.00 – 115.00 %/s	A2: 3.50	A_2 Negative ramp rate
★ 14	▲	GGNN	2#: 2221	X_2 connection terminal (no connection allowed)
★ 15	▲	GGNN	3#: 2321	X_3 connection terminal (no connection allowed)

MODEL NO.	BLOCK NAME	MODEL NO.
63	Mean Average	63

ABBR: MAJ

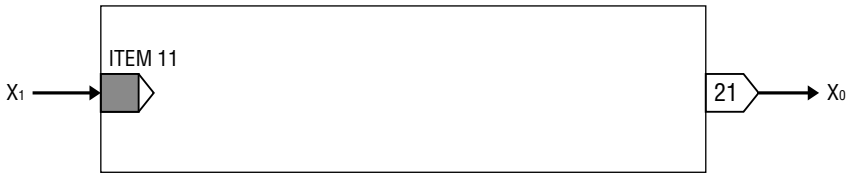

General Description

With N numbers of samples, the block discards U numbers of largest ones and L number of smallest ones, then outputs proportionally to the average of the rest.

GROUP [30 – 61] ◆: Automatically changeable parameters ★: Setting data

ITEM	MDFY	DATA INPUT	DISPLAY (e.g.)	CONTENTS
01	●	(always modifiable)		■ MAINTENANCE SWITCH (lock command)
		0	MT: 0	MONITOR mode: data monitoring only
		1	MT: 1	PROGRAM mode: "▲" marked data modifiable
02	IND	No input	ER: NN	Error indication (00: normal, 01 – 90: error)
03	▲	±115.00 %	21: NNN.NN	X_0 Output
★ **10**	▲	**63**	**MD: 63**	**MEAN AVERAGE (model)** '-' to clear.
★ 11	▲	GGNN	1#: 1221	X_1 connection terminal (error if not connected) GG: Group No. NN: terminal No.
◆★12	▲	0.5 – 115.0 s	H: 0.5	H Sampling cycle (min. 0.5 sec. increments)
◆★13	▲	1 – 8	N: 8	N Number of samples to be calculated
◆★14	▲	0 – 7	U: 2	U Number of largest samples to be discarded
◆★15	▲	0 – 7	L: 2	L Number of smallest samples to be discarded

MODEL NO.	BLOCK NAME	MODEL NO.
64	Moving Average	64

ABBR: RAV

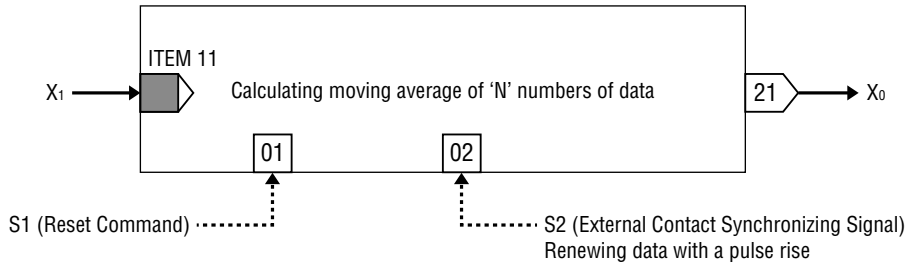

General Description

With N numbers of samples, the block outputs proportionally to their average. When a new sample is added, it rejects the oldest sample and recalculates.

• Three sampling modes are available: (1) 0: time, (2) 1: computation cycle, and (3) 2: synchronized to external contact.

• With Reset SW S1 = 1, the output is equal to the input.

GROUP [30 – 61] ◆: Automatically changeable parameters ★: Setting data

ITEM	MDFY	DATA INPUT	DISPLAY (e.g.)	CONTENTS
01	●	(always modifiable)		■ MAINTENANCE SWITCH (lock command)
		0	MT: 0	MONITOR mode: data monitoring only
		1	MT: 1	PROGRAM mode: "▲" marked data modifiable
02	IND	No input	ER: NN	Error indication (00: normal, 01 – 90: error)
03	▲	±115.00 %	21: NNN.NN	X_0 Output
04	▲	0, 1	S1: N	S1 Reset SW (1: reset)
05	▲	0, 1	S2: N	S2 External synchronization contact signal
★ **10**	▲	**64**	**MD: 64**	**MOVING AVERAGE (model)** '-' to clear.
★ 11	▲	GGNN	1#: 1221	X_1 connection terminal (error if not connected) GG: Group No. NN: terminal No.
◆ ★ 12	▲	0.1 – 115.0 s	H: 0.5	H Sampling cycle (min. 0.1 sec. increments) SC 1.40 (Remark 1)
◆ ★ 13	▲	1 – 32	N: 8	N Number of samples to be calculated SC 1.40 (Remark 2)
★ 14	▲	0, 1, 2	SM: 2	SM Sampling mode (0: time, 1: computation cycle, 2: synchronized to external contact)
★ 15	▲	0, 1	CM: 0	CM Calculation mode SC 1.40 (0: simple average, 1: true sample average)

Remark 1: Range 0.5 – 115.0 sec., min. 0.5 sec. increments for versions lower than SC Ver 1.40.

Remark 2: Range 1 – 16 for versions lower than SC Ver 1.40.

■ Calculation Mode

• Simple Average

Averaging calculation is executed always with the number of samples specified with ITEM 13 when the reset switch (S1) is turned to '0'.

[Example]

Number of samples to be calculated: 4
Input 50% when the S1 is at '1'
Input changed to 60%, 70% and then 80% when the S1 is at '0'

(1) Reset SW : 1

Input 50% →	50%	50%	50%	50%	→ Output (50+50+50+50) ÷ 4 = 50%

(2) Reset SW : 0

Input 60% →	60%	50%	50%	50%	→ Output (60+50+50+50) ÷ 4 = 52.5%

(3) Next sampling cycle

Input 70% →	70%	60%	50%	50%	→ Output (70+60+50+50) ÷ 4 = 57.5%

(4) Next sampling cycle

Input 80% →	80%	70%	60%	50%	→ Output (80+70+60+50) ÷ 4 = 65%

• True Sample Average

Averaging calculation is executed always with actial number of samples when the reset switch (S1) is turned to '0'.
The result is equal to the simple average when samples reaches the number of samples specified with ITEM 13.

[Example]

Number of samples to be calculated: 4
Input 50% when the S1 is at '1'
Input changed to 60%, 70% and then 80% when the S1 is at '0'

(1) Reset SW : 1

Input 50% →	50%	50%	50%	50%	→ Output (50+50+50+50) ÷ 4 = 50%

(2) Reset SW : 0

Input 60% →	60%	---	---	---	→ Output (60) ÷ 1 = 60%

(3) Next sampling cycle

Input 70% →	70%	60%	---	---	→ Output (70+60) ÷ 2 = 65%

(4) Next sampling cycle

Input 80% →	80%	70%	60%	---	→ Output (80+70+60) ÷ 3 = 70%

MODEL NO.	BLOCK NAME	MODEL NO.
65	Lead Time Computation	65

ABBR: LED

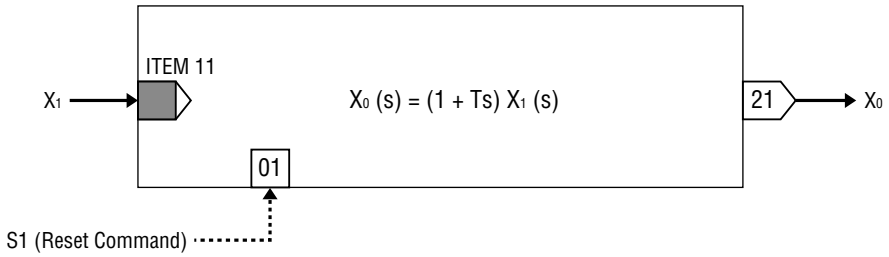

General Description

This block is used to calculate lead time of control signal.
With Reset SW S1 = 1, the output is equal to the input.

GROUP [30 – 61] ◆: Automatically changeable parameters ★: Setting data

ITEM	MDFY	DATA INPUT	DISPLAY (e.g.)	CONTENTS
01	●	(always modifiable)		■ MAINTENANCE SWITCH (lock command)
		0	MT: 0	MONITOR mode: data monitoring only
		1	MT: 1	PROGRAM mode: "▲" marked data modifiable
02	IND	No input	ER: NN	Error indication (00: normal, 01 – 90: error)
03	▲	±115.00 %	21: NNN.NN	X_0 Output
04	▲	0, 1	S1: N	S1 Reset SW (1: reset)
07	▲	±115.00 %	X1: NNN.NN	X_1 Input
★ **10**	▲	**65**	**MD: 65**	**LEAD TIME COMPUTATION (model)** '-' to clear.
★ 11	▲	GGNN	1#: 1221	X_1 connection terminal (error if not connected) GG: Group No. NN: terminal No.
◆ ★ 12	▲	0.0 – 100.0 s	T: NNN.N	T Time constant (0.0: no lead)

MODEL NO.	BLOCK NAME	MODEL NO.
66	Dead Time Computation	66

ABBR: DTM

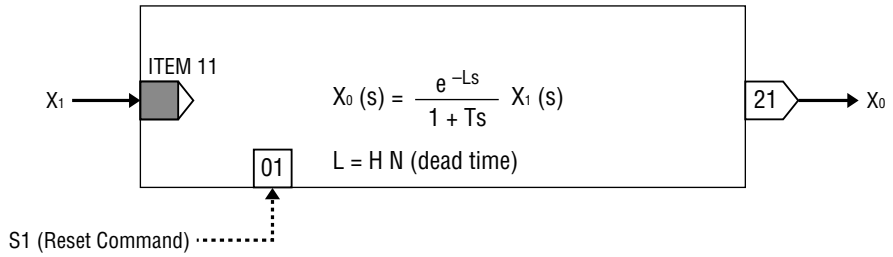

General Description

The output is delayed by L seconds after the input. If you add lag time constant, the module calculates first order lag after the dead time.

With Reset SW S1 = 1, the output is equal to the input.

GROUP [30 – 61] ◆: Automatically changeable parameters ★: Setting data

ITEM	MDFY	DATA INPUT	DISPLAY (e.g.)	CONTENTS
01	●	(always modifiable)		■ MAINTENANCE SWITCH (lock command)
		0	MT: 0	MONITOR mode: data monitoring only
		1	MT: 1	PROGRAM mode: "▲" marked data modifiable
02	IND	No input	ER: NN	Error indication (00: normal, 01 – 90: error)
03	▲	±115.00 %	21: NNN.NN	X_0 Output
04	▲	0, 1	S1: N	S1 Reset SW (1: reset)
07	▲	±115.00 %	X1: NNN.NN	X_1 Input
★ **10**	▲	**66**	**MD: 66**	**DEAD TIME COMPUTATION (model)** '-' to clear.
★ 11	▲	GGNN	1#: 1221	X_1 connection terminal (error if not connected) GG: Group No. NN: terminal No.
◆★12	▲	0.0 – 100.0 s	TC: NNN.N	TC Time constant (0.0: no lag)
◆★13	▲	0.5 – 115.0 s	H: 0.5	H Sampling cycle (min. 0.5 sec. increments)
◆★14	▲	0 – 8	N: 8	N Number of samples to be calculated (0: dead time = 0)

MODEL NO.	BLOCK NAME	MODEL NO.
67	Dead Time Compensation	67

ABBR: DTC

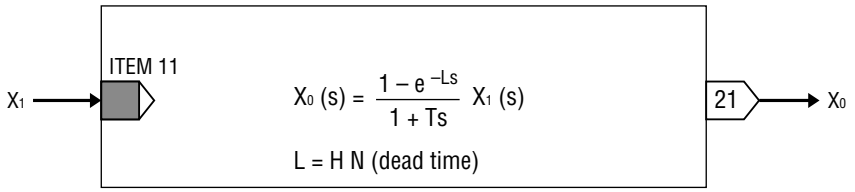

General Description

Used for Smith's dead time compensation. Typical application is for a process in which long dead time exists constantly. Refer to 'Function Block Application Manual' for the use of the block.

GROUP [30 – 61] ◆: Automatically changeable parameters ★: Setting data

ITEM	MDFY	DATA INPUT	DISPLAY (e.g.)	CONTENTS
01	●	(always modifiable)		■ MAINTENANCE SWITCH (lock command)
		0	MT: 0	MONITOR mode: data monitoring only
		1	MT: 1	PROGRAM mode: "▲" marked data modifiable
02	IND	No input	ER: NN	Error indication (00: normal, 01 – 90: error)
03	▲	±115.00 %	21: NNN.NN	X_0 Output
07	▲	±115.00 %	X1: NNN.NN	X_1 Input
★ **10**	▲	**67**	**MD: 67**	**DEAD TIME COMPENSATION (model)** '-' to clear.
★ 11	▲	GGNN	1#: 1221	X_1 connection terminal (error if not connected) GG: Group No. NN: terminal No.
◆★12	▲	0.0 – 100.0 s	TC: NNN.N	TC Time constant (0.0: no lag)
◆★13	▲	0.5 – 115.0 s	H: 0.5	H Sampling cycle (min. 0.5 sec. increments)
◆★14	▲	0 – 8	N: 8	N Number of samples to be calculated (0: dead time = 0)

MODEL NO.	BLOCK NAME	MODEL NO.
68	Accumulator (momentary value input)	68

ABBR: QNT

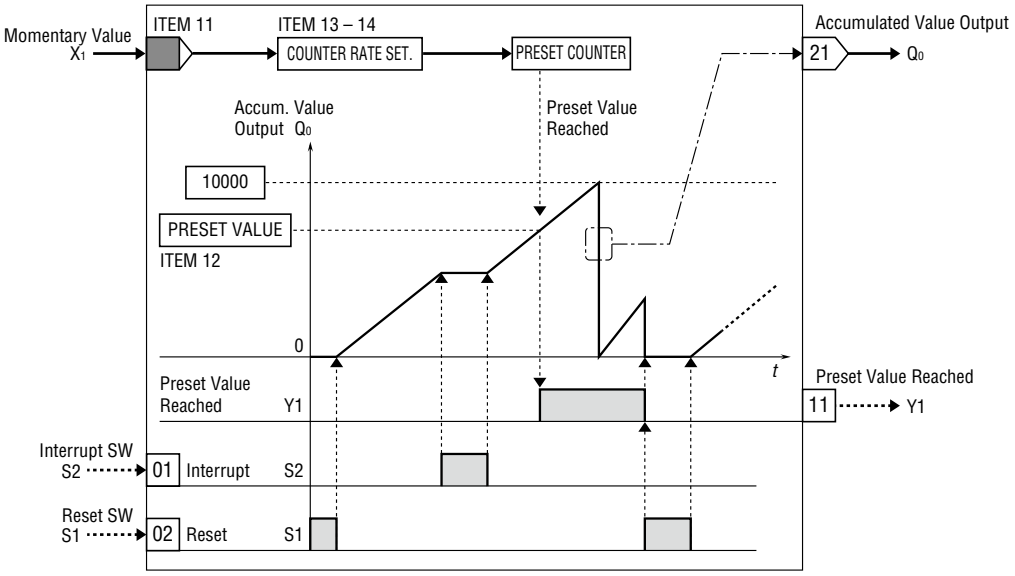

General Description

Used to continuously totalize analog signals and also as a preset counter.

- With Interrupt SW S2 set to '1', the module does not count.
- With Reset SW S1 set to '1', accumulated value is reset to '0', while the Preset Value Reached Signal Y1 is turned off.
- The accumulated value output Q_0 returns automatically to 0 counts when the counter reaches 10000 counts. Fractions are not dropped but added.
- If the accumulated value output Q_0 is connected to an analog input terminal of another function block, 10000 counts are equal to 100.00%.

Setting Example

You have a range of 0 – 150 m^3/h as momentary value. You need 150 counts per hour, that is 1 count per 1 m^3.

ITEM 13: 150 (counter rate K)
ITEM 14: 2 (time unit C)

If you need 1500 counts per hour (1 count per 0.1 m^3):

ITEM 13: 1500 (counter rate K)

GROUP [30 – 61] ◆: Automatically changeable parameters ★: Setting data

ITEM	MDFY	DATA INPUT	DISPLAY (e.g.)	CONTENTS
01	●	(always modifiable)		■ MAINTENANCE SWITCH (lock command)
		0	MT: 0	MONITOR mode: data monitoring only
		1	MT: 1	PROGRAM mode: "▲" marked data modifiable
02	IND	No input	ER: NN	Error indication (00: normal, 01 – 90: error)
04	▲	0.00 – 100.00	21: NNN.NN	Q_0 Accumulated value output (0 to 10000 counts are represented as 0.00 to 100.0%)
05	▲	0, 1	S1: N	S1 Reset SW (1: reset)
06	▲	0, 1	S2: N	S2 Interrupt SW (1: interrupt)
07	▲	0, 1	Y1: N	Y1 Preset value reached output
08	▲	±115.00 %	X1: NNN.NN	X_1 Input
★ **10**	▲	**68**	**MD: 68**	**ACCUMULATOR (model)** '-' to clear.
★ 11	▲	GGNN	1#: 1221	X_1 connection terminal (error if not connected) GG: Group No. NN: terminal No.
◆★ 12	●	0 – 10000	PS: NNNN	PS Preset value
★ 13	▲	0.00 – 10000.00	K: NNNNN.NN	K Counter rate (Set the number of counts you need the module counts with continuous 100% status for 'C' time duration [ITEM 14])
★ 14	▲	0, 1, 2, 3	C: N	C Time unit (0: sec, 1: min, 2: hour, 3: day)

MODEL NO.	BLOCK NAME	MODEL NO.
69	Ramp Program Setter	69

ABBR: PRG

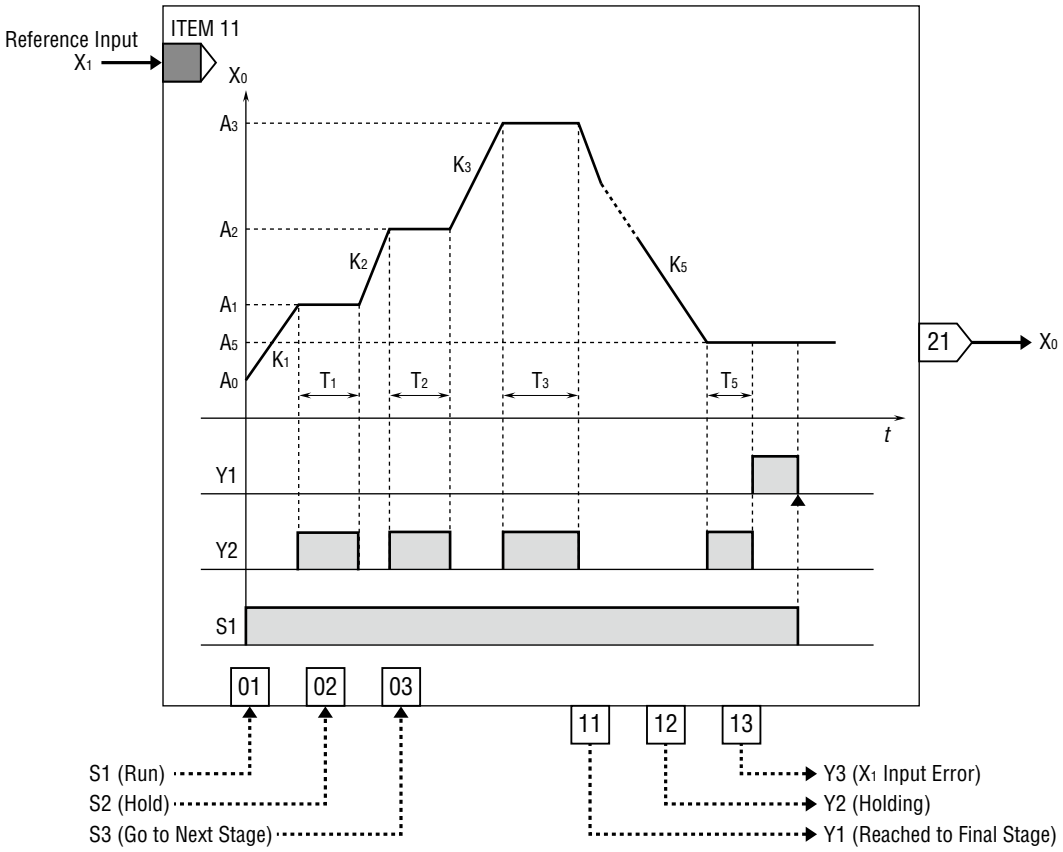

General Description

Ramp programming is done by setting ramp rates.

- Run SW S1 operates with '1', the program starts with reference input X_1 and initial value A_0.
- Run SW S1 resets Y1, Y2 and Y3 with '0'. Output value X_0 holds the output before reset.
- The program stops where it is when the Hold SW S2 is turned to '1'.
- The 'Hold' timer can be forcibly ended with an one-shot input of 'Go to Next Stage' SW S3.
- If you set a ramp rate $K_n = 0$, other parameters concerning this ramp (C_n, A_n, T_n and P_n) are disregarded.
- If you do not use (do not connect) a reference input X_1, the program starts at the initial value A_0 in the ramp rate K_1.

If you have the X_1, it starts at the initial value X_1 in the ramp rate K_1. However, if the K_1 is set to a positive value and the X_1 is greater than the Hold value A_1, or if the K_1 is set to a negative value and the X_1 is smaller than the A_1, the Y3 (X_1 error status) is turned to '1' and the program does not start.

GROUP [72 – 79] ◆: Automatically changeable parameters ★: Setting data

ITEM	MDFY	DATA INPUT	DISPLAY (e.g.)	CONTENTS
01	●	(always modifiable)		■ MAINTENANCE SWITCH (lock command)
		0	MT: 0	MONITOR mode: data monitoring only
		1	MT: 1	PROGRAM mode: "▲" marked data modifiable
02	IND	No input	ER: NN	Error indication (00: normal, 01 – 90: error)
03	▲	±115.00 %	21: NNN.NN	X_0 Output
04	▲	0, 1	S1: N	S1 Run SW (0: reset, 1: run)
05	▲	0, 1	S2: N	S2 Hold SW (1: hold)
06	▲	0, 1	S3: N	S3 Go to next stage SW (force-end the intermediate hold timer)
07	▲	0, 1	Y1: N	Y1 Reached to final stage
08	▲	0, 1	Y2: N	Y2 Holding
09	▲	0, 1	Y3: N	Y3 X_1 input error
★ **10**	▲	**69**	**MD: 69**	**RAMP PROGRAM SETTER (model)** '-' to clear.
★ 11	▲	GGNN	1#: 1221	X_1 connection terminal (no connection allowed) GG: Group No. NN: terminal No.
◆★12	▲	±115.00 %	A0: NNN.NN	A_0 Initial value
◆★13	▲	±115.00 %/C1	K1: NNN.NN	K_1 Ramp rate
◆★14	▲	0, 1, 2	C1: N	C_1 Time unit (0: sec, 1: min, 2: hour)
◆★15	▲	±115.00 %	A1: NNN.NN	A_1 Hold value
◆★16	▲	0 – 1000	T1: NNNN	T_1 Hold time
◆★17	▲	0, 1, 2	P1: N	P_1 Time unit (0: sec, 1: min, 2: hour)
◆★18	▲	±115.00 %/C2	K2: NNN.NN	K_2 Ramp rate
◆★19	▲	0, 1, 2	C2: N	C_2 Time unit (0: sec, 1: min, 2: hour)
◆★20	▲	±115.00 %	A2: NNN.NN	A_2 Hold value
◆★21	▲	0 – 1000	T2: NNNN	T_2 Hold time
◆★22	▲	0, 1, 2	P2: N	P_2 Time unit (0: sec, 1: min, 2: hour)
◆★23	▲	±115.00 %/C3	K3: NNN.NN	K_3 Ramp rate
◆★24	▲	0, 1, 2	C3: N	C_3 Time unit (0: sec, 1: min, 2: hour)
◆★25	▲	±115.00 %	A3: NNN.NN	A_3 Hold value
◆★26	▲	0 – 1000	T3: NNNN	T_3 Hold time
◆★27	▲	0, 1, 2	P3: N	P_3 Time unit (0: sec, 1: min, 2: hour)
◆★28	▲	±115.00 %/C4	K4: NNN.NN	K_4 Ramp rate
◆★29	▲	0, 1, 2	C4: N	C_4 Time unit (0: sec, 1: min, 2: hour)
◆★30	▲	±115.00 %	A4: NNN.NN	A_4 Hold value
◆★31	▲	0 – 1000	T4: NNNN	T_4 Hold time
◆★32	▲	0, 1, 2	P4: N	P_4 Time unit (0: sec, 1: min, 2: hour)
◆★33	▲	±115.00 %/C5	K5: NNN.NN	K_5 Ramp rate
◆★34	▲	0, 1, 2	C5: N	C_5 Time unit (0: sec, 1: min, 2: hour)
◆★35	▲	±115.00 %	A5: NNN.NN	A_5 Hold value
◆★36	▲	0 – 1000	T5: NNNN	T_5 Hold time
◆★37	▲	0, 1, 2	P5: N	P_5 Time unit (0: sec, 1: min, 2: hour)

MODEL NO.	BLOCK NAME	MODEL NO.
70	High/Low Limiter	70

ABBR: HLL

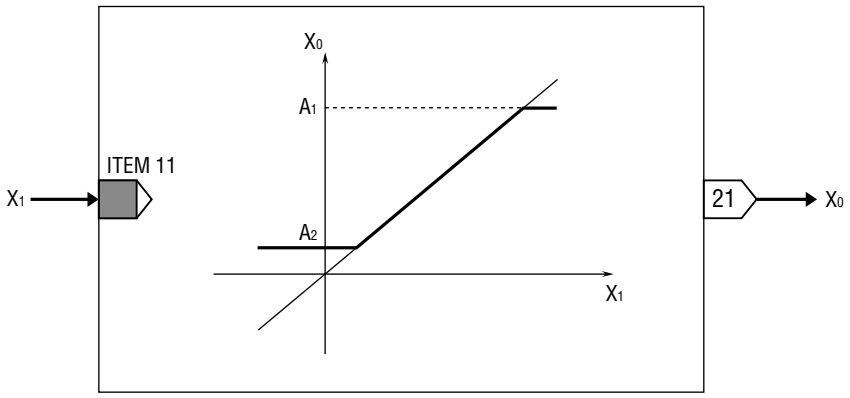

General Description: Used to limit analog input signal within a preset range.

GROUP [30 – 61] ◆: Automatically changeable parameters ★: Setting data

ITEM	MDFY	DATA INPUT	DISPLAY (e.g.)	CONTENTS
01	●	(always modifiable)		■ MAINTENANCE SWITCH (lock command)
		0	MT: 0	MONITOR mode: data monitoring only
		1	MT: 1	PROGRAM mode: "▲" marked data modifiable
02	IND	No input	ER: NN	Error indication (00: normal, 01 – 90: error)
03	▲	±115.00 %	21: NNN.NN	X_0 Output
07	▲	±115.00 %	X1: NNN.NN	X_1 Value after limit
★ **10**	▲	**70**	**MD: 70**	**HIGH/LOW LIMITER (model)** '-' to clear.
★ 11	▲	GGNN	1#: 1221	X_1 connection terminal (error if not connected) GG: Group No. NN: terminal No.
◆ ★ 12	▲	±115.00 %	A1: NNN.NN	A_1 High limit
◆ ★ 13	▲	±115.00 %	A2: NNN.NN	A_2 Low limit

MODEL NO.	BLOCK NAME	MODEL NO.
71	Deviation Limiter	71

ABBR: DVL

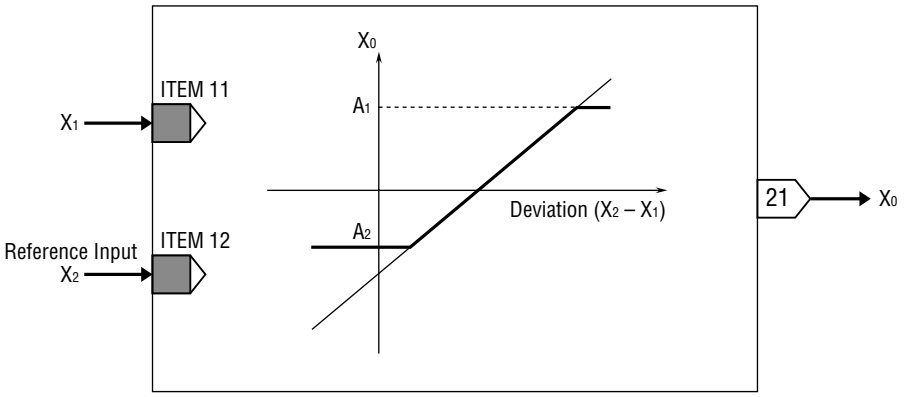

General Description

Used to calculate deviation between two analog inputs and limit the deviation within a preset range.

GROUP [30 – 61] ◆: Automatically changeable parameters ★: Setting data

ITEM	MDFY	DATA INPUT	DISPLAY (e.g.)	CONTENTS
01	●	(always modifiable)		■ MAINTENANCE SWITCH (lock command)
		0	MT: 0	MONITOR mode: data monitoring only
		1	MT: 1	PROGRAM mode: "▲" marked data modifiable
02	IND	No input	ER: NN	Error indication (00: normal, 01 – 90: error)
03	▲	±115.00 %	21: NNN.NN	X_0 Output
07	▲	±115.00 %	X1: NNN.NN	X_1 Input
08	▲	±115.00 %	X2: NNN.NN	X_2 Reference input
★ **10**	▲	**71**	**MD: 71**	**DEVIATION LIMITER (model)** '-' to clear.
★ 11	▲	GGNN	1#: 1221	X_1 connection terminal (error if not connected) GG: Group No. NN: terminal No.
★ 12	▲	GGNN	2#: 1321	X_2 connection terminal (error if not connected)
◆★13	▲	±115.00 %	A1: NNN.NN	A_1 High deviation limit
◆★14	▲	±115.00 %	A2: NNN.NN	A_2 Low deviation limit

MODEL NO.	BLOCK NAME	MODEL NO.
18	Input Selector (with ramp control at switching)	18

ABBR: SFT

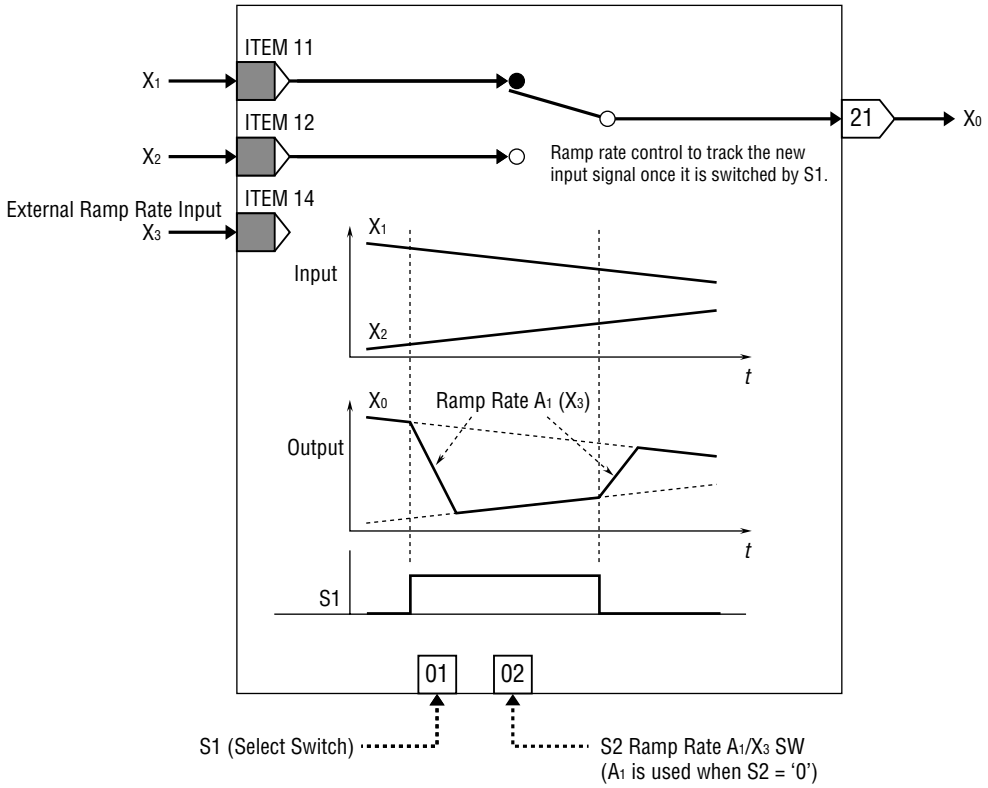

General Description

Used to select and output either one of two analog inputs.

Operation

When S1 is set, the output X_0 starts to track the selected input X_1 or X_2 at a ramp rate A_1 or X_3.

- With S1 = '0', the input X_1 is selected.
- With the ramp rate set to 0, the output immediately tracks the selected input.
- External ramp rate X_3: Data range 0 – 10000 is converted into 0 – 100%. A_1 is used when X_3 is not connected. With negative input, the ramp rate equals 0.

GROUP [30 – 61] ◆: Automatically changeable parameters ★: Setting data

ITEM	MDFY	DATA INPUT	DISPLAY (e.g.)	CONTENTS
01	●	(always modifiable)		■ MAINTENANCE SWITCH (lock command)
		0	MT: 0	MONITOR mode: data monitoring only
		1	MT: 1	PROGRAM mode: "▲" marked data modifiable
02	IND	No input	ER: NN	Error indication (00: normal, 01 – 90: error)
03	▲	±115.00 %	21: NNN.NN	X_0 Output
04	▲	0, 1	S1: N	S1 Select SW (0: select X_1, 1: select X_2)
05	▲	0, 1	S2: N	S2 Ramp rate A_1 / X_3 SW
07	▲	±115.00 %	X1: NNN.NN	X_1 Input
08	▲	±115.00 %	X2: NNN.NN	X_2 Input
09	▲	0.00 – 115.00 %/s	X3: NNN.NN	X_3 Ramp rate by remote setting
★ **10**	▲	**18**	**MD: 18**	**INPUT SELECTOR (model)** '-' to clear.
★ 11	▲	GGNN	1#: 1221	X_1 connection terminal (error if not connected) GG: Group No. NN: terminal No.
★ 12	▲	GGNN	2#: 1321	X_2 connection terminal (no connection allowed)
◆ ★ 13	▲	0.00 – 115.00 %/s	A1: 3.50	A_1 Ramp rate
★ 14	▲	GGNN	3#: 2321	X_3 connection terminal (no connection allowed)

MODEL NO.	BLOCK NAME	MODEL NO.
19	Output Selector	19

ABBR: OTS

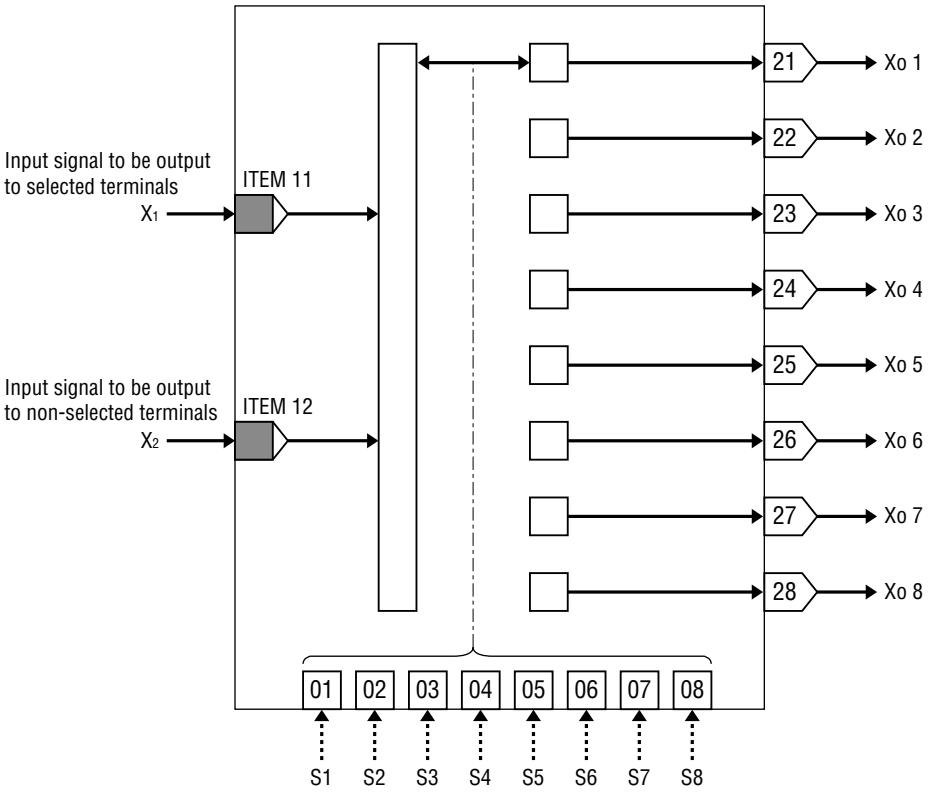

General Description

Used to route an input to a specified channel of 8 outputs.

- S1 through S8 correspond respectively to Xo 1 through Xo 8.
- ITEM 12 set value is output at unconnected terminals.
- If more than one switch is selected, higher switch number (S1...S8) prevails.
- S1 through S8 are set to '0' at cold start.

GROUP [30 – 61] ★: Setting data

ITEM	MDFY	DATA INPUT	DISPLAY (e.g.)	CONTENTS
01	●	(always modifiable)		■ MAINTENANCE SWITCH (lock command)
		0	MT: 0	MONITOR mode: data monitoring only
		1	MT: 1	PROGRAM mode: "▲" marked data modifiable
02	IND	No input	ER: NN	Error indication (00: normal, 01 – 90: error)
03	▲	±115.00 %	X1: NNN.NN	X_1 Input
04	▲	±115.00 %	X2: NNN.NN	X_2 Input
★ **10**	▲	**19**	**MD: 19**	**OUTPUT SELECTOR (model)** '-' to clear.
★ 11	▲	GGNN	1#: 1221	X_1 connection terminal (error if not connected) GG: Group No. NN: terminal No.
★ 12	▲	GGNN	2#: 1321	X_2 connection terminal (no connection allowed) X_2 is provided to non-selected channels. 0% is output if not connected.
21	▲	0, 1	01: N	S1 Select SW
22	▲	0, 1	02: N	S2 Select SW
23	▲	0, 1	03: N	S3 Select SW
24	▲	0, 1	04: N	S4 Select SW
25	▲	0, 1	05: N	S5 Select SW
26	▲	0, 1	06: N	S6 Select SW
27	▲	0, 1	07: N	S7 Select SW
28	▲	0, 1	08: N	S8 Select SW

MODEL NO.	BLOCK NAME	MODEL NO.
72	Input Selector (2 points)	72

ABBR: INS

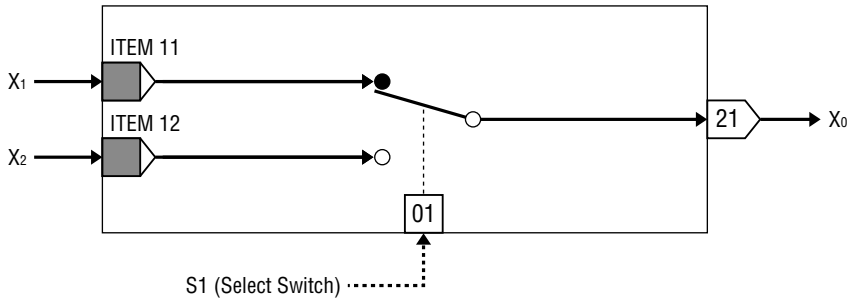

General Description

Used to select and output either one of two analog inputs.
With S1 = '0', the input X_1 is selected.

GROUP [30 – 61] ★: Setting data

ITEM	MDFY	DATA INPUT	DISPLAY (e.g.)	CONTENTS
01	●	(always modifiable)		■ MAINTENANCE SWITCH (lock command)
		0	MT: 0	MONITOR mode: data monitoring only
		1	MT: 1	PROGRAM mode: "▲" marked data modifiable
02	IND	No input	ER: NN	Error indication (00: normal, 01 – 90: error)
03	▲	±115.00 %	21: NNN.NN	X_0 Output
04	▲	0, 1	S1: N	S1 Select SW (0: select X_1)
07	▲	±115.00 %	X1: NNN.NN	X_1 Input
08	▲	±115.00 %	X2: NNN.NN	X_2 Input
★ **10**	▲	**72**	**MD: 72**	**INPUT SELECTOR (model)** '-' to clear.
★ 11	▲	GGNN	1#: 1221	X_1 connection terminal (error if not connected) GG: Group No. NN: terminal No.
★ 12	▲	GGNN	2#: 1321	X_2 connection terminal (no connection allowed)

■ Signal Hold

The output signal can be held if you connect the output X_0 to the input X_2 and turn Select SW S1 on as shown in the figure below.

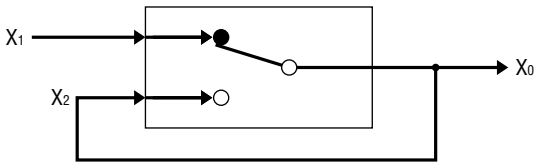

MODEL NO.	BLOCK NAME	MODEL NO.
85	Input Selector (8 points)	85

ABBR: INE

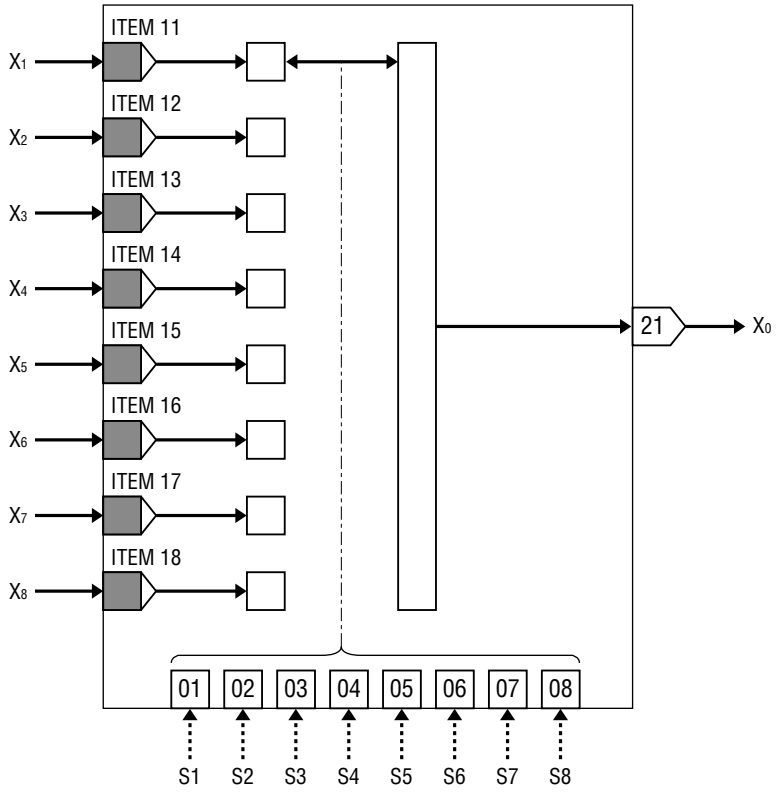

General Description

Used to select and output either one of eight analog inputs.

- S1 through S8 correspond respectively to the input X_1 through X_8. With none selected, the output X_0 equals 0%.
- With more than one switch is set to '1', larger number channel among S1 through S8 is valid.
- The input X_1 must be connected. Error is given if not connected.
- If the connected input connection terminal is not registered, the output X_0 equals 0%.
- S1 through S8 are set to '0' as default value at cold start.

GROUP [30 – 61] ★: Setting data

	ITEM	MDFY	DATA INPUT	DISPLAY (e.g.)	CONTENTS
	01	●	(always modifiable)		■ MAINTENANCE SWITCH (lock command)
			0	MT: 0	MONITOR mode: data monitoring only
			1	MT: 1	PROGRAM mode: "▲" marked data modifiable
	02	IND	No input	ER: NN	Error indication (00: normal, 01 – 90: error)
	03	▲	±115.00 %	21: NNN.NN	X_0 Output
★	**10**	▲	**85**	**MD: 85**	**8-POINT INPUT SELECTOR (model)** '-' to clear.
★	11	▲	GGNN	1#: 1221	X_1 connection terminal (error if not connected) GG: Group No. NN: terminal No.
★	12	▲	GGNN	2#: 1222	X_2 connection terminal (no connection allowed)
★	13	▲	GGNN	3#: 1321	X_3 connection terminal (no connection allowed)
★	14	▲	GGNN	4#: 1322	X_4 connection terminal (no connection allowed)
★	15	▲	GGNN	5#: 1421	X_5 connection terminal (no connection allowed)
★	16	▲	GGNN	6#: 1422	X_6 connection terminal (no connection allowed)
★	17	▲	GGNN	7#: 1521	X_7 connection terminal (no connection allowed)
★	18	▲	GGNN	8#: 1522	X_8 connection terminal (no connection allowed)
	21	▲	0, 1	01: N	S1 X_1 select SW
	22	▲	0, 1	02: N	S2 X_2 select SW
	23	▲	0, 1	03: N	S3 X_3 select SW
	24	▲	0, 1	04: N	S4 X_4 select SW
	25	▲	0, 1	05: N	S5 X_5 select SW
	26	▲	0, 1	06: N	S6 X_6 select SW
	27	▲	0, 1	07: N	S7 X_7 select SW
	28	▲	0, 1	08: N	S8 X_8 select SW

MODEL NO.	BLOCK NAME	MODEL NO.
73	Maximum Value Selector	73

ABBR: MAX

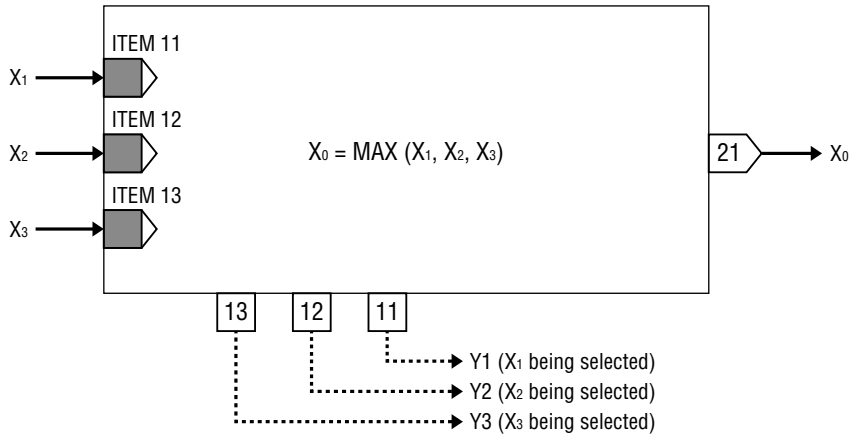

General Description

Used to select and output the largest of three analog inputs.
Status monitor output Y1 – Y3 indicates which input is currently selected.

GROUP [30 – 61] ★: Setting data

ITEM	MDFY	DATA INPUT	DISPLAY (e.g.)	CONTENTS
01	●	(always modifiable)		■ MAINTENANCE SWITCH (lock command)
		0	MT: 0	MONITOR mode: data monitoring only
		1	MT: 1	PROGRAM mode: "▲" marked data modifiable
02	IND	No input	ER: NN	Error indication (00: normal, 01 – 90: error)
03	▲	±115.00 %	21: NNN.NN	X_0 Output
04	▲	0, 1	Y1: N	Y1 X_1 being selected
05	▲	0, 1	Y2: N	Y2 X_2 being selected
06	▲	0, 1	Y3: N	Y3 X_3 being selected
07	▲	±115.00 %	X1: NNN.NN	X_1 Input
08	▲	±115.00 %	X2: NNN.NN	X_2 Input
09	▲	±115.00 %	X3: NNN.NN	X_3 Input
★ **10**	▲	**73**	**MD: 73**	**MAXIMUM VALUE SELECTOR (model)** '-' to clear.
★ 11	▲	GGNN	1#: 1221	X_1 connection terminal (error if not connected) GG: Group No. NN: terminal No.
★ 12	▲	GGNN	2#: 1321	X_2 connection terminal (no connection allowed)
★ 13	▲	GGNN	3#: 1421	X_3 connection terminal (no connection allowed)

MODEL NO.	BLOCK NAME	MODEL NO.
74	Minimum Value Selector	74

ABBR: MIN

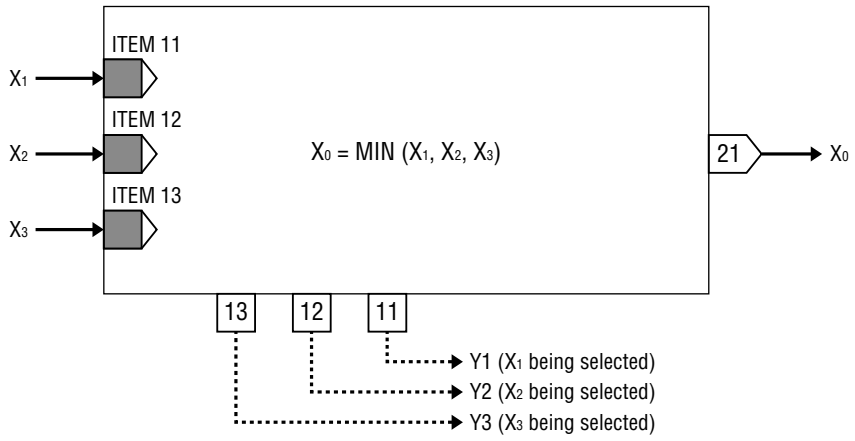

General Description

Used to select and output the smallest of three analog inputs.
Status monitor output Y1 – Y3 indicates which input is currently selected.

GROUP [30 – 61] ★: Setting data

ITEM	MDFY	DATA INPUT	DISPLAY (e.g.)	CONTENTS
01	●	(always modifiable)		■ MAINTENANCE SWITCH (lock command)
		0	MT: 0	MONITOR mode: data monitoring only
		1	MT: 1	PROGRAM mode: "▲" marked data modifiable
02	IND	No input	ER: NN	Error indication (00: normal, 01 – 90: error)
03	▲	±115.00 %	21: NNN.NN	X_0 Output
04	▲	0, 1	Y1: N	Y1 X_1 being selected
05	▲	0, 1	Y2: N	Y2 X_2 being selected
06	▲	0, 1	Y3: N	Y3 X_3 being selected
07	▲	±115.00 %	X1: NNN.NN	X_1 Input
08	▲	±115.00 %	X2: NNN.NN	X_2 Input
09	▲	±115.00 %	X3: NNN.NN	X_3 Input
★ **10**	▲	**74**	**MD: 74**	**MINIMUM VALUE SELECTOR (model)** '-' to clear.
★ 11	▲	GGNN	1#: 1221	X_1 connection terminal (error if not connected) GG: Group No. NN: terminal No.
★ 12	▲	GGNN	2#: 1321	X_2 connection terminal (no connection allowed)
★ 13	▲	GGNN	3#: 1421	X_3 connection terminal (no connection allowed)

MODEL NO.	BLOCK NAME	MODEL NO.
75	Parameter Selector (2 points)	75

ABBR: CTS

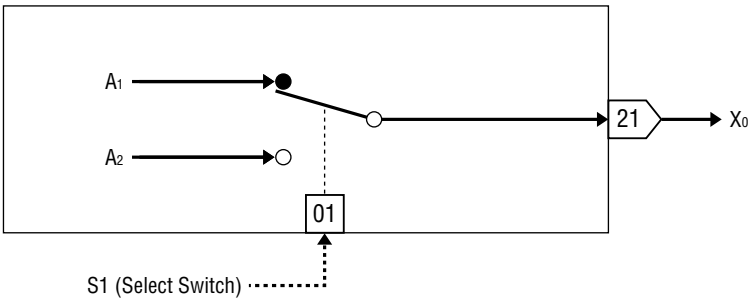

General Description

Used to select and output either one of two parameters.
With S1 = '0', the parameter A_1 is selected.

GROUP [30 – 61] ◆: Automatically changeable parameters ★: Setting data

ITEM	MDFY	DATA INPUT	DISPLAY (e.g.)	CONTENTS
01	●	(always modifiable)		■ MAINTENANCE SWITCH (lock command)
		0	MT: 0	MONITOR mode: data monitoring only
		1	MT: 1	PROGRAM mode: "▲" marked data modifiable
02	IND	No input	ER: NN	Error indication (00: normal, 01 – 90: error)
03	▲	±115.00 %	21: NNN.NN	X_0 Output
04	▲	0, 1	S1: N	S1 Select SW (0: select A_1, 1: select A_2)
★ **10**	▲	**75**	**MD: 75**	**PARAMETER SELECTOR (model)** '-' to clear.
◆★11	▲	±115.00 %	A1: NNN.NN	A_1 Parameter
◆★12	▲	±115.00 %	A2: NNN.NN	A_2 Parameter

MODEL NO.	BLOCK NAME	MODEL NO.
86	Parameter Generator (8 points)	86

ABBR: CTE

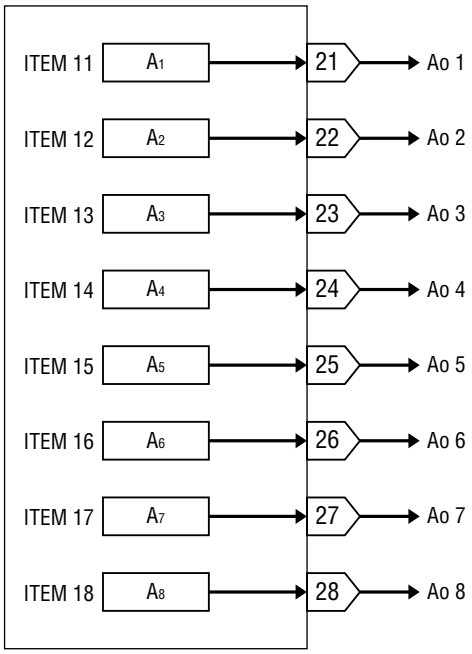

General Description: Eight constant parameters are generated.

GROUP [30 – 61] ◆: Automatically changeable parameters ★: Setting data

ITEM	MDFY	DATA INPUT	DISPLAY (e.g.)	CONTENTS
01	●	(always modifiable)		■ MAINTENANCE SWITCH (lock command)
		0	MT: 0	MONITOR mode: data monitoring only
		1	MT: 1	PROGRAM mode: "▲" marked data modifiable
02	IND	No input	ER: NN	Error indication (00: normal, 01 – 90: error)
★ **10**	▲	**86**	**MD: 86**	**PARAMETER GENERATOR (model)** '-' to clear.
◆★11	▲	±115.00 %	21: NNN.NN	A_1 Parameter
◆★12	▲	±115.00 %	22: NNN.NN	A_2 Parameter
◆★13	▲	±115.00 %	23: NNN.NN	A_3 Parameter
◆★14	▲	±115.00 %	24: NNN.NN	A_4 Parameter
◆★15	▲	±115.00 %	25: NNN.NN	A_5 Parameter
◆★16	▲	±115.00 %	26: NNN.NN	A_6 Parameter
◆★17	▲	±115.00 %	27: NNN.NN	A_7 Parameter
◆★18	▲	±115.00 %	28: NNN.NN	A_8 Parameter

MODEL NO.	BLOCK NAME	MODEL NO.
76	High/Low Alarm	76

ABBR: PVA

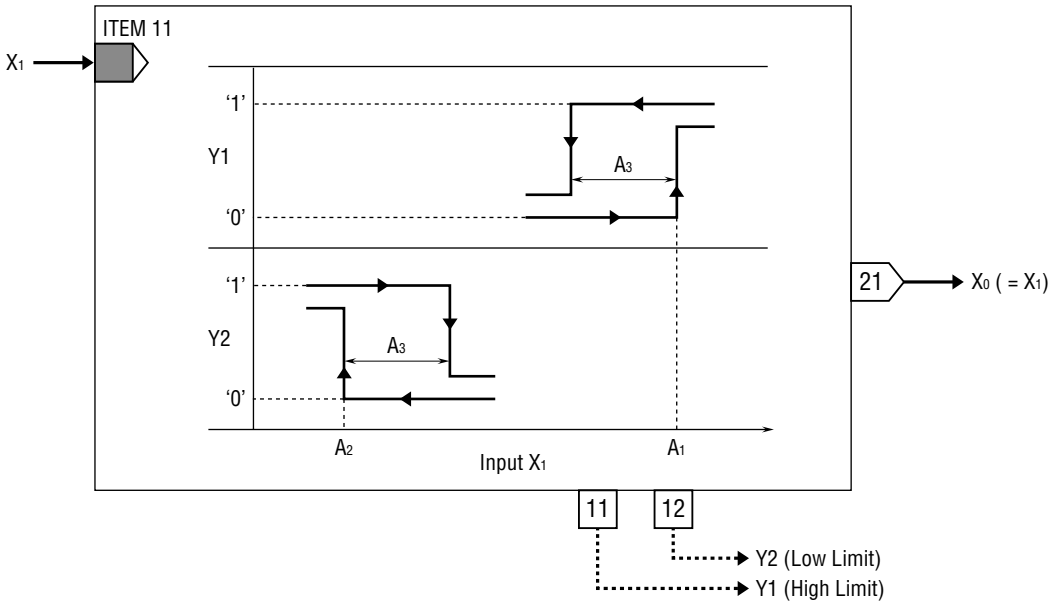

General Description

The block provides alarm contact outputs for high and low limit.
Both output Y1 and Y2 respectively have hysteresis (deadband) A_3.
There is no interference between high setpoint A_1 and low setpoint A_2.

GROUP [30 – 61] ◆: Automatically changeable parameters ★: Setting data

ITEM	MDFY	DATA INPUT	DISPLAY (e.g.)	CONTENTS
01	●	(always modifiable)		■ MAINTENANCE SWITCH (lock command)
		0	MT: 0	MONITOR mode: data monitoring only
		1	MT: 1	PROGRAM mode: "▲" marked data modifiable
02	IND	No input	ER: NN	Error indication (00: normal, 01 – 90: error)
03	▲	±115.00 %	21: NNN.NN	X_0 Output
04	▲	0, 1	Y1: N	Y1 High alarm output
05	▲	0, 1	Y2: N	Y2 Low alarm output
07	▲	±115.00 %	X1: NNN.NN	X_1 Input
★ **10**	▲	**76**	**MD: 76**	**HIGH/LOW ALARM (model)** '-' to clear.
★ 11	▲	GGNN	1#: 1221	X_1 connection terminal (error if not connected) GG: Group No. NN: terminal No.
◆★12	▲	±115.00 %	A1: NNN.NN	A_1 High setpoint
◆★13	▲	±115.00 %	A2: NNN.NN	A_2 Low setpoint
◆★14	▲	0.00 – 115.00 %	A3: NNN.NN	A_3 Hysteresis (deadband)

MODEL NO.	BLOCK NAME	MODEL NO.
77	Deviation Alarm	77

ABBR: DVA

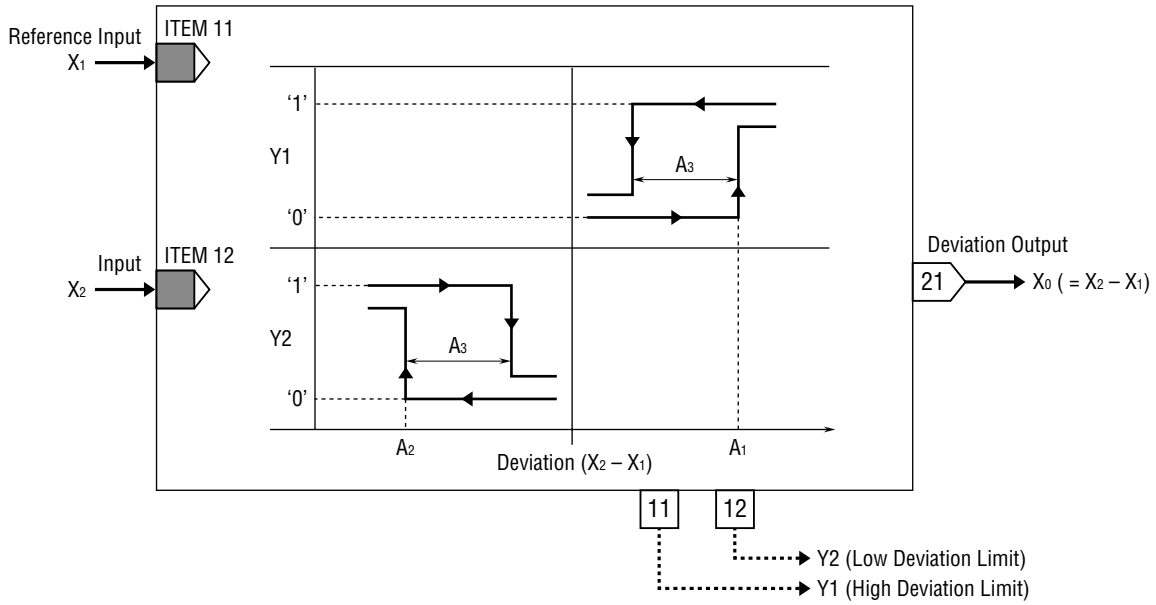

General Description: The block provides alarm contact outputs for the deviation of two input signals.

GROUP [30 – 61] ◆: Automatically changeable parameters ★: Setting data

ITEM	MDFY	DATA INPUT	DISPLAY (e.g.)	CONTENTS
01	●	(always modifiable)		■ MAINTENANCE SWITCH (lock command)
		0	MT: 0	MONITOR mode: data monitoring only
		1	MT: 1	PROGRAM mode: "▲" marked data modifiable
02	IND	No input	ER: NN	Error indication (00: normal, 01 – 90: error)
03	▲	±115.00 %	21: NNN.NN	X_0 Output (deviation)
04	▲	0, 1	Y1: N	Y1 High deviation alarm output
05	▲	0, 1	Y2: N	Y2 Low deviation alarm output
07	▲	±115.00 %	X1: NNN.NN	X_1 Reference input
08	▲	±115.00 %	X2: NNN.NN	X_2 Input
★ **10**	▲	**77**	**MD: 77**	**DEVIATION ALARM (model)** '-' to clear.
★ 11	▲	GGNN	1#: 1221	X_1 connection terminal (error if not connected) GG: Group No. NN: terminal No.
★ 12	▲	GGNN	2#: 1222	X_2 connection terminal (error if not connected)
◆★13	▲	±115.00 %	A1: NNN.NN	A_1 High setpoint
◆★14	▲	±115.00 %	A2: NNN.NN	A_2 Low setpoint
◆★15	▲	0.00 – 115.00 %	A3: NNN.NN	A_3 Hysteresis (deadband)

MODEL NO.	BLOCK NAME	MODEL NO.
78	Rate of Change Alarm	78

ABBR: VRA

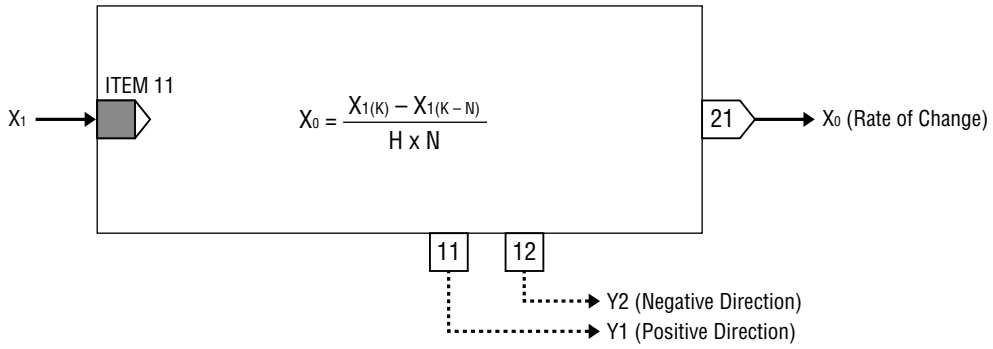

General Description

The block calculates the difference between the present sample value $X_{1\,(K)}$ with another $X_{1\,(K-N)}$ stored N samples before, and divides it by the elapsed time (H x N [seconds]) to obtain its rate of change.
If the rate of change is greater than the positive rate A_1, the output Y1 turns to '1'.
If the rate of change is smaller than the negative rate A_2, the output Y2 turns to '1'.
Both setpoints respectively have hysteresis A_3.
Negative direction setpoint A_2 must be set to a positive value.

GROUP [30 – 61] ◆: Automatically changeable parameters ★: Setting data

ITEM	MDFY	DATA INPUT	DISPLAY (e.g.)	CONTENTS
01	●	(always modifiable)		■ MAINTENANCE SWITCH (lock command)
		0	MT: 0	MONITOR mode: data monitoring only
		1	MT: 1	PROGRAM mode: "▲" marked data modifiable
02	IND	No input	ER: NN	Error indication (00: normal, 01 – 90: error)
03	▲	±115.00 %	21: NNN.NN	X_0 Output (change rate)
04	▲	0, 1	Y1: N	Y1 Positive direction alarm output
05	▲	0, 1	Y2: N	Y2 Negative direction alarm output
07	▲	±115.00 %	X1: NNN.NN	X_1 Input
★ **10**	▲	**78**	**MD: 78**	**RATE OF CHANGE ALARM (model)** '-' to clear.
★ 11	▲	GGNN	1#: 1221	X_1 connection terminal (error if not connected) GG: Group No. NN: terminal No.
★ 12	▲	0.5 – 115.0 s	H: 0.5	H Sampling cycle (min. 0.5 sec. increments)
★ 13	▲	1 – 8	N: 8	N Number of samples to be calculated
◆★14	▲	0.00 – 115.00 %/s	A1: 3.50	A_1 Positive direction setpoint
◆★15	▲	0.00 – 115.00 %/s	A2: 3.50	A_2 Negative direction setpoint
◆★16	▲	0.00 – 115.00 %	A3: NNN.NN	A_3 Hysteresis (deadband)

MODEL NO.	BLOCK NAME	MODEL NO.
79	Parameter Setter	79

ABBR: PMS

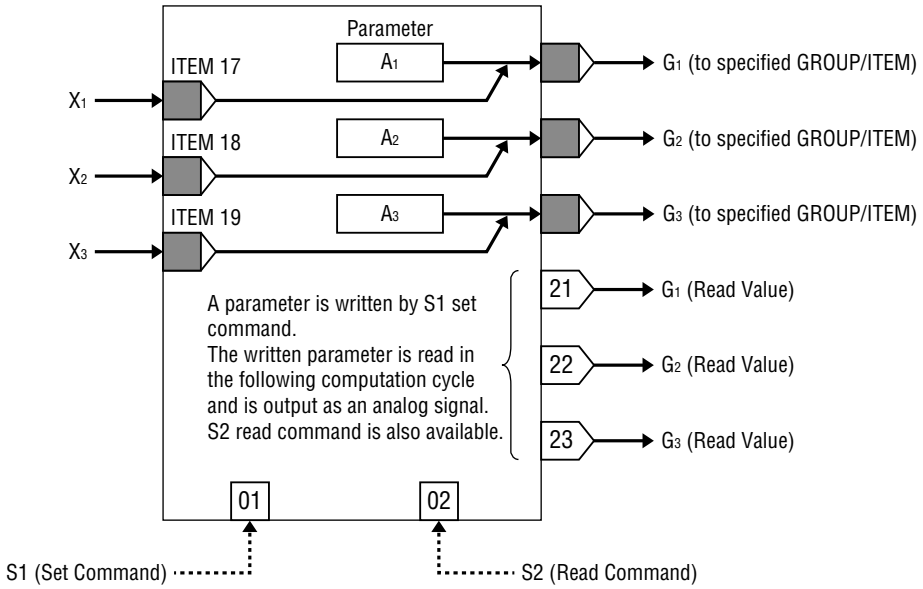

General Description

When Set Command SW S1 is turned to '1', the module rewrites parameters in specified function blocks.

- Changeable parameters (ITEM) are marked with '◆' in the Function Block List (2 byte data only).
- Decimal point position of an analog range will be disregarded. The one used in the rewritten ITEM will be used.
- Written parameters can be read at the analog terminals 21, 22 and 23.
- Typical applications of External Parameters:
  - Setting PID parameters using Ai Receive Terminal.
  - Changing function parameters
  - Changing parameters for a math function module according to the result of another function module.

WARNING !

Use OUTPUT SHOT commands for S1 and S2.
Parameters in each function block can be rewritten approx. one hundred thousand (100,000) times (according to nominal specification of the EEPROM).
For example, if you rewrite a parameter every one hour, the EEPROM is usable approx. eleven years.
Please consider this information carefully when you design an application of this function block.
When setting ITEM No. for each output connecting terminal, do not use contact (0, 1) or 1 byte (-128 to 127) numbers.

GROUP [30 – 61] ★: Setting data

ITEM	MDFY	DATA INPUT	DISPLAY (e.g.)	CONTENTS
01	●	(always modifiable)		■ MAINTENANCE SWITCH (lock command)
		0	MT: 0	MONITOR mode: data monitoring only
		1	MT: 1	PROGRAM mode: "▲" marked data modifiable
02	IND	No input	ER: NN	Error indication (00: normal, 01 – 90: error)
04	▲	0, 1	S1: N	S1 Set command SW
05	▲	±115.00 %	X1: NNN.NN	X_1 Input
06	▲	±115.00 %	X2: NNN.NN	X_2 Input
07	▲	±115.00 %	X3: NNN.NN	X_3 Input
★ **10**	▲	**79**	**MD: 79**	**PARAMETER SETTER (model)** '-' to clear.
★ 11	▲	GGII	G1: 3014	G_1 output connection terminal GG: Group No. II: Item No.
★ 12	▲	GGII	G2: 3114	G_2 output connection terminal
★ 13	▲	GGII	G3: 3215	G_3 output connection terminal
INTERNAL PARAMETER SETTING			Data range corresponds to that used in the destination ITEM (decimal point not included)	
★ 14	▲	±32000	A1: XXXXX	A_1 Parameter
★ 15	▲	±32000	A2: XXXXX	A_2 Parameter
★ 16	▲	±32000	A3: XXXXX	A_3 Parameter
EXTERNAL PARAMETER SETTING			GG: Group No. NN: terminal No. (analog or discrete) With GGNN = 0 or no connection, internal parameter setting will have a priority.	
★ 17	▲	GGNN	X1: 1101	X_1 connection terminal (no connection allowed)
★ 18	▲	GGNN	X2: 1221	X_2 connection terminal (no connection allowed)
★ 19	▲	GGNN	X3: 1321	X_3 connection terminal (no connection allowed)
PARAMETER READING				
20	▲	0, 1	S2: N	S2 Read command SW
21	▲	±115.00 %	21: 0.14	G_1 Read value (Remark 1)
22	▲	±115.00 %	22: 1.00	G_2 Read value (Remark 1)
23	▲	±115.00 %	23: 12.34	G_3 Read value (Remark 1)

Remark 1: Decimal Point Position

Analog data is provided automatically with two decimal places. However, actual decimal point position depends upon data of the destination. For example, if you read the proportional band of a PID control as 100%, 1.00 is indicated. Likewise, if you read a gain of a computing module, the gain 1.234 will be indicated as 12.34.

MODEL NO.	BLOCK NAME	MODEL NO.
80	Numeral Converter	80

ABBR: BCD

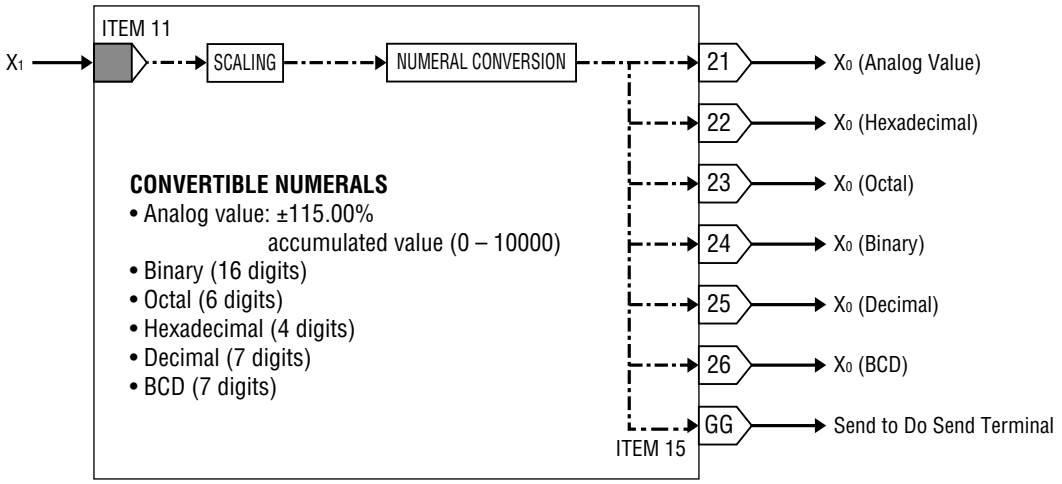

General Description

The input value is converted and output at the specified numeric terminal. It may not be converted appropriately if a terminal other than one for analog signal is used.

GROUP [30 – 61] ★: Setting data

ITEM	MDFY	DATA INPUT	DISPLAY (e.g.)	CONTENTS
01	●	(always modifiable)		■ MAINTENANCE SWITCH (lock command)
		0	MT: 0	MONITOR mode: data monitoring only
		1	MT: 1	PROGRAM mode: "▲" marked data modifiable
02	IND	No input	ER: NN	Error indication (00: normal, 01 – 90: error)
03	▲	±115.00 %	21: NNN.NN	X_0 Output indication (analog value)
04	▲	0000 – FFFF	22: NNNN	X_0 Output indication (hexadecimal)
05	▲	000000 – 177777	23: NNNNNN	X_0 Output indication (octal)
06	▲	00.... – 11....	24: NN....	X_0 Output indication (binary, 16 digits) (13 upper digits)
07	▲	0 – 1000000	25: NNNNNNN	X_0 Output indication (decimal, 7 digits)
08	▲	0.000000 – 1000000	26: NNNNNNN	X_0 Output indication (BCD, 7 digits)
09	▲	NNNNN....	X1: NNNNN...	Input indication (according to numeral of input)
★ **10**	▲	**80**	**MD: 80**	**NUMERAL CONVERTER (model)** '-' to clear.
INPUT				
★ 11	▲	GGNN	1#: 1221	X_1 connection terminal (error if not connected) GG: Group No. NN: terminal No. Set N = 00 when input from Di/Do communication terminal.
★ 12	▲	0, 1, 2, 3, 4, 5	IN: N	Numeral of input signal 0: analog value 3: binary (16 digits) 1: hexadecimal (4 digits) 4: decimal (7 digits) 2: octal (6 digits) 5: BCD (7 digits)
OUTPUT				
★ 15	▲	GG (11 – 26)	GG: 12	G_1 output connection terminal (no connection allowed) GG: Group No. of Do communication terminal
★ 16	▲	0, 1, 2, 3, 4, 5	OT: N	Numeral of output signal 0: analog value 3: binary (16 digits) 1: hexadecimal (4 digits) 4: decimal (7 digits) 2: octal (6 digits) 5: BCD (7 digits)
SCALING				
★ 17	▲	0, 1, 2	SC: N	Scaling mode (0: without, 1: with span, 2: with offset + span)
SCALING RANGE WITH ANALOG INPUT				(decimal point position for BCD output)
★ 20	▲	±32000	MH: 15000	Upper range (at 100% input)
★ 21	▲	±32000	ML: 0	Lower range (at 0% input)
★ 22	▲	0, 1, 2, 3, 4, 5	DP: 1	Decimal point position (from rightmost position)
SCALING RANGE BETWEEN NUMERALS OTHER THAN ANALOG SIGNAL				
★ 23	▲	NNNN.....N	X1: 0	X_1 value
★ 24	▲	NNNN.....N	Y1: 0	Y_1 value
★ 25	▲	NNNN.....N	X2: FFFF	X_2 value
★ 26	▲	NNNN.....N	Y2: 1000000	Y_2 value

Remarks:
With ITEM 12 'Numeral of input signal' set to '1: hexadecimal (4 digits)', add '0' at the top of the value for ITEM 23 'X_1 value' or ITEM 25 'X_2 value', if it should start with 'D.'
Apply the same principle for ITEM 24 'Y_1 value' or ITEM 26 'Y_2 value', with ITEM 15 'Numeral of output signal' set to '1: hexadecimal (4 digits)'.

■ Scaling of Analog Input (mode 1: with span)

Analog input (0 – 100.00%) is converted into engineering unit value by its span. Zero point is equal to 0.
A typical application of this scaling function is to "indicate analog signal in an engineering unit on the Digital Indicator (model: ABD)."

ANALOG INPUT ➔ SCALING: INPUT% x (MH – ML) ➔ OUTPUT NUMERAL CONVERSION ➔ OUTPUT

Only when the converted result is output in BCD, decimal point position and negative range can be included in the scaling. When it is output in decimals, negative range is included.
When the value converted into an engineering unit is output in other numeral systems, negative range is output as 0.

■ Scaling of Analog Input (mode 2: with span + offset)

Analog input (0 – 100.00%) is converted into engineering unit value by its span and offset.

ANALOG INPUT ➔ SCALING: INPUT% x (MH – ML) + ML ➔ OUTPUT NUMERAL CONVERSION ➔ OUTPUT

Only when the converted result is output in BCD, decimal point position and negative range can be included in the scaling. When it is output in decimals, negative range is included.
When the value converted into an engineering unit is output in other numeral systems, absolute value of negative range is output.

■ Scaling of Numerals Other Than Analog Input

The value is scaled without minus sign or decimal point. The scaling is performed according to data between two points as shown in the figure below.

The numeral system of analog value at the analog output terminal '21' is the same as that of output signal.
If you need to use an input signal in a numeral other than analog for some computation block, first convert the signal into analog utilizing this numeral conversion block. Then input the converted analog signal to the computation block and then send the result back to another numeral conversion block.

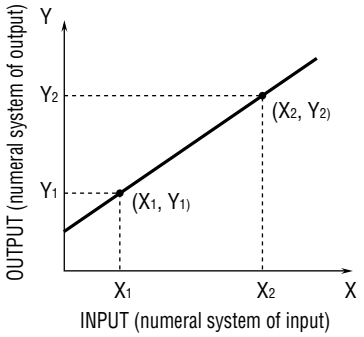

■ Signal Assignment in the Communication Terminal Block for Discrete I/O

ASSIGN.	DECIMAL*	BCD		HEXADECIMAL		OCTAL		BINARY		ASSIGN.
	Weight (W)	W	Contents	W	Contents	W	Contents	Weight	Contents	
1	1	1	Decimal point	1	LSD	1	LSD	1	LSD	1
2	2	2	position (from	2	x 1	2	x 1	2	2nd LSD	2
3	4	4	LSB)	4		4		4	3rd LSD	3
4	8	1	(±) Sign	8		1	2nd LSD	8	4th LSD	4
5	16	1	LSD	1	2nd LSD	2	x 8	16	5th LSD	5
6	32	2	x 1	2	x 16	4		32	6th LSD	6
7	64	4		4		1	3rd LSD	64	7th LSD	7
8	128	8		8		2	x 64	128	8th LSD	8
9	256	1	2nd LSD	1	3rd LSD	4		256	9th LSD	9
10	512	2	x 10	2	x 256	1	4th LSD	512	10th LSD	10
11	1024	4		4		2	x 512	1024	11th LSD	11
12	2048	8		8		4		2048	12th LSD	12
13	4096	1	3rd LSD	1	4th LSD	1	5th LSD	4096	13th LSD	13
14	8192	2	x 100	2	x 4096	2	x 4096	8192	14th LSD	14
15	16384	4		4		4		16384	15th LSD	15
16	32768	8		8		1	x 32768	32768	16th LSD	16
17	65536	1	4th LSD							
18	131072	2	x 1000							
19	262144	4								
20	524288	8								
21		1	5th LSD							
22	Reserved	2	x 10000							
23		4								
24		8								
25		1	6th LSD							
26	Reserved	2	x 100000							
27		4								
28		8								
29	Reserved	1	7h LSD x 1000000							
30										
31	Reserved	Reserved								
32										

LSB = Least Significant Bit
LSD = Least Significant Digit

* With decimal output setting, the range 0...1000000 is output in 20 bits. Negative range is represented in 2's complements. Bit 21...32 turn '1.'

MODEL NO.	BLOCK NAME	MODEL NO.
81	Weight Totalizer	81

ABBR: QWT

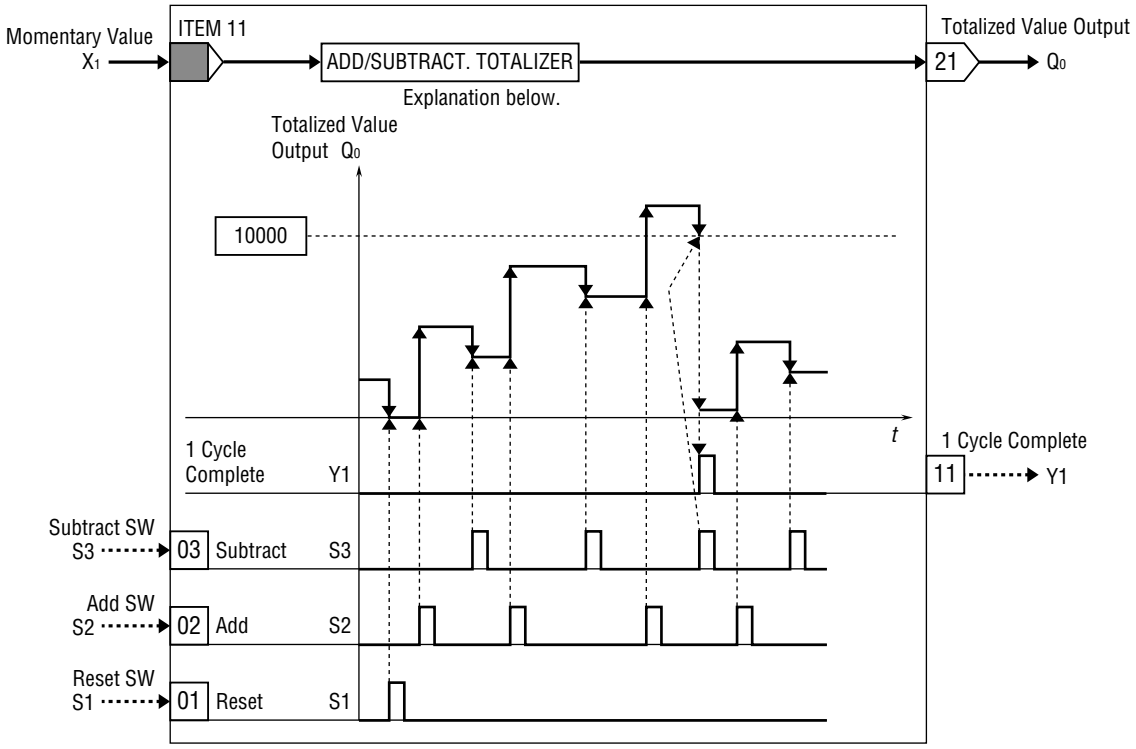

General Description

The block is used for a hopper scale to totalize ingredient weight by adding total weight and subtracting tare weight.

- Setting Reset SW to '1' will adjust the totalized value to '0'.
- Add SW and Subtract SW will be provided by shot signals in Sequential Control block.
- Measured signal will be totalized by Add SW, while subtracted by Subtract SW.
- Totalized Value Output Q_0, in addition mode, continues counting even after the counter reaches 10000. It returns to 0 only if the counts still exceeds 10000 after a subtraction signal is received and applied. The fractions of 10000 counts will not be dropped but added at this point.
- '1 Cycle Completed' output Y1 is connected to a Counter block so that it can totalize the weight. When the accumulation of Q_0 signal reaches 10000 and returns to 0 count, the Y1 is turned on for 1 computation cycle duration.
- If you connect the Totalized Value Output Q_0 to an analog input terminal of another function block, 10000 counts will be converted as 100.00%.

It is recommended that application is designed so that the totalized value remains within the maximum value of 10000.

GROUP [30 – 61] ★: Setting data

ITEM	MDFY	DATA INPUT	DISPLAY (e.g.)	CONTENTS
01	●	(always modifiable)		■ MAINTENANCE SWITCH (lock command)
		0	MT: 0	MONITOR mode: data monitoring only
		1	MT: 1	PROGRAM mode: "▲" marked data modifiable
02	IND	No input	ER: NN	Error indication (00: normal, 01 – 90: error)
04	▲	0 – 10000	21: NNNNN	Q_0 Totalized value output
05	▲	0, 1	S1: N	S1 Reset SW (1: reset)
06	▲	0, 1	S2: N	S2 Add SW (1: add)
07	▲	0, 1	S3: N	S3 Subtract SW (1: subtract)
08	▲	0, 1	Y1: N	Y1 1 cycle complete output
09	▲	-15.00 – 115.00 %	X1: NNN.NN	X_1 Input
★ **10**	▲	**81**	**MD: 81**	**WEIGHT TOTALIZER (model)** '-' to clear.
★ 11	▲	GGNN	1#: 1221	X_1 connection terminal (error if not connected) GG: Group No. NN: terminal No.

MODEL NO.	BLOCK NAME	MODEL NO.
82	Analog/Pulse Duration Converter	82

ABBR: ADT

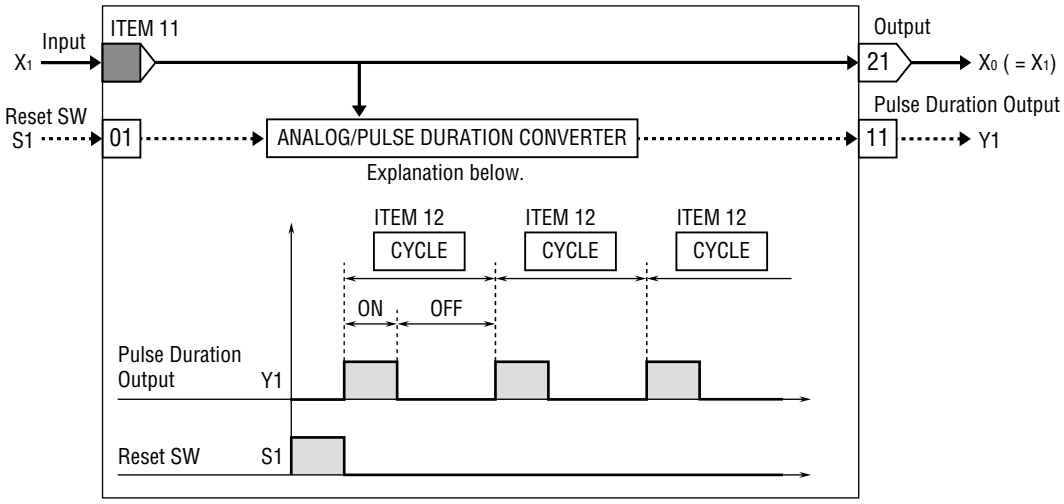

General Description

The ON/OFF output duration ratio, in a constant cycle duration, is proportional to the input signal.

- With the input below 0%, the output Y1 is set to '0' for a whole cycle duration. With the input over 100%, the output Y1 is set to '1' for a whole cycle duration.
- While Reset SW is set to '0', the output Y1 repeatedly turns on and off ('1' - '0') according to the input X_1.
- The minimum time resolution is 0.1 second. However, it cannot be shorter than the computation cycle.

GROUP [30 – 61] ◆: Automatically changeable parameters ★: Setting data

ITEM	MDFY	DATA INPUT	DISPLAY (e.g.)	CONTENTS
01	●	(always modifiable)		■ MAINTENANCE SWITCH (lock command)
		0	MT: 0	MONITOR mode: data monitoring only
		1	MT: 1	PROGRAM mode: "▲" marked data modifiable
02	IND	No input	ER: NN	Error indication (00: normal, 01 – 90: error)
03	▲	±115.00 %	21: NNN.NN	X_0 Output
04	▲	0, 1	S1: N	S1 Reset SW (1: reset)
05	▲	0, 1	Y1: N	Y1 Pulse duration output
★ **10**	▲	**82**	**MD: 82**	**ANALOG/PULSE DURATION CONVERTER (model)** '-' to clear.
★ 11	▲	GGNN	1#: 1221	X_1 connection terminal (error if not connected) GG: Group No. NN: terminal No.
◆ ★ 12	●	0 – 1000 s	CT: NNNN	CT Pulse cycle time

MODEL NO.	BLOCK NAME	MODEL NO.
83	Analog Signal Hold	83

ABBR: AMM

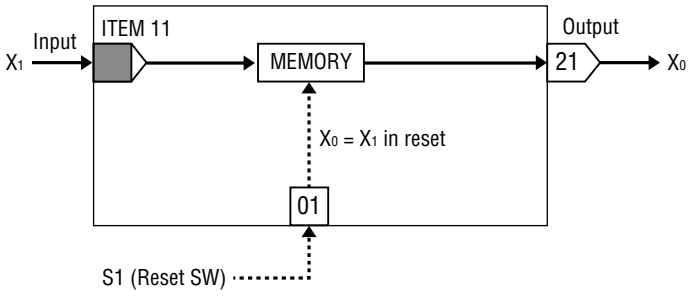

General Description

Used to hold either of the maximum, the minimum or the momentary value of an input signal.

- With Reset SW S1 set to '1', the output X_0 equals the input X_1. To reset, use a shot command ON signal in Sequential Control block.
- The momentary value hold mode: the momentary value is stored in memory with an one-shot input S1.

GROUP [30 – 61] ★: Setting data

ITEM	MDFY	DATA INPUT	DISPLAY (e.g.)	CONTENTS
01	●	(always modifiable)		■ MAINTENANCE SWITCH (lock command)
		0	MT: 0	MONITOR mode: data monitoring only
		1	MT: 1	PROGRAM mode: "▲" marked data modifiable
02	IND	No input	ER: NN	Error indication (00: normal, 01 – 90: error)
03	▲	±115.00 %	21: NNN.NN	X_0 Output
04	▲	0, 1	S1: N	S1 Reset SW (1: reset)
★ **10**	▲	**83**	**MD: 83**	**ANALOG SIGNAL HOLD (model)** '-' to clear.
★ 11	▲	GGNN	1#: 1221	X_1 connection terminal (error if not connected) GG: Group No. NN: terminal No.
★ 12	▲	0, 1, 2	MM: N	Hold mode (0: minimum, 1: momentary, 2: maximum)

MODEL NO.	BLOCK NAME	MODEL NO.
84	ITEM Reader	84

ABBR: ITR

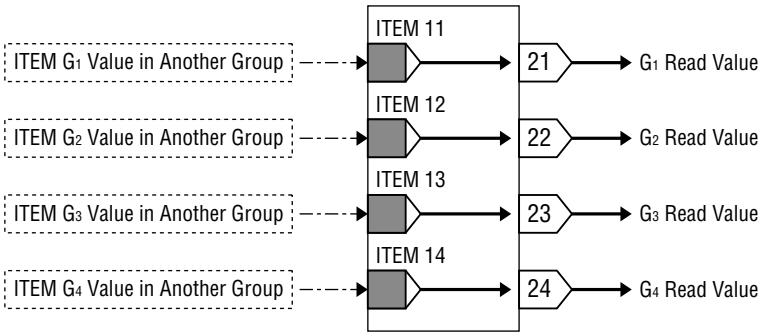

General Description

Used to read parameters, analog values, switch status and internal computation value from ITEMs of another GROUP.

GROUP [30 – 61] ★: Setting data

ITEM	MDFY	DATA INPUT	DISPLAY (e.g.)	CONTENTS
01	●	(always modifiable)		■ MAINTENANCE SWITCH (lock command)
		0	MT: 0	MONITOR mode: data monitoring only
		1	MT: 1	PROGRAM mode: "▲" marked data modifiable
02	IND	No input	ER: NN	Error indication (00: normal, 01 – 90: error)
★ **10**	▲	**84**	**MD: 84**	**ITEM READER (model)** '-' to clear.
★ 11	▲	GGII	G1: 3014	G_1 connection terminal (error if not connected) GG: Group No. II: Item No.
★ 12	▲	GGII	G2: 3114	G_2 connection terminal (no connection allowed)
★ 13	▲	GGII	G3: 3215	G_3 connection terminal (no connection allowed)
★ 14	▲	GGII	G4: 3326	G_4 connection terminal (no connection allowed)
21	▲	NNNNNN	21: 14	G_1 Read value (Remark 1)
22	▲	NNNNNN	22: -100	G_2 Read value (Remark 1)
23	▲	NNNNNN	23: 1234	G_3 Read value (Remark 1)
24	▲	NNNNNN	24: 12345	G_4 Read value (Remark 1)

Remark 1: ITEM 21 – 24 are indicated in 16-bit binary. Therefore, the decimal point of the original ITEM location is lost. If another block enters a value from the ITEM for which only positive range is available (for example, 0 – 64000) and then this block reads the value, it is converted and indicated as approx. ±320.00%.

MODEL NO.	BLOCK NAME	MODEL NO.
87	Contact Distributor	87

ABBR: DCN

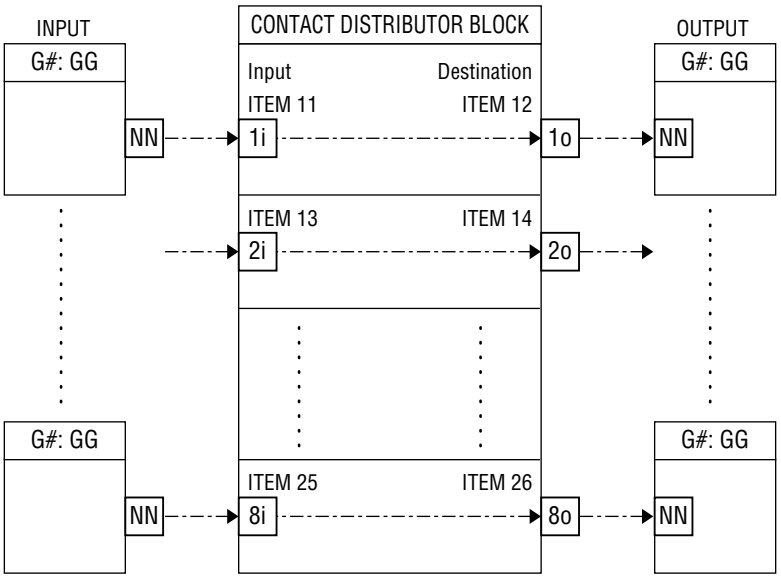

General Description

Used to connect 1 point discrete input to 1 point discrete output.

- 8 pairs can be specified without utilizing Sequential Control Program block.
- Beneficial for connecting directly between a Field Terminal and a Communication Terminal.

GROUP [30 – 61] ★: Setting data

	ITEM	MDFY	DATA INPUT	DISPLAY (e.g.)	CONTENTS
	01	●	(always modifiable)		■ MAINTENANCE SWITCH (lock command)
			0	MT: 0	MONITOR mode: data monitoring only
			1	MT: 1	PROGRAM mode: "▲" marked data modifiable
	02	IND	No input	ER: NN	Error indication (00: normal, 01 – 90: error)
★	**10**	▲	**87**	**MD: 87**	**CONTACT DISTRIBUTOR (model)** '-' to clear.
★	11	▲	GGNN	1I : GGNN	1i Input terminal GG: Group No. NN: terminal No.
★	12	▲	GGNN	1O: GGNN	1o Destination terminal
★	13	▲	GGNN	2I : GGNN	2i Input terminal
★	14	▲	GGNN	2O: GGNN	2o Destination terminal
★	15	▲	GGNN	3I : GGNN	3i Input terminal
★	16	▲	GGNN	3O: GGNN	3o Destination terminal
★	17	▲	GGNN	4I : GGNN	4i Input terminal
★	18	▲	GGNN	4O: GGNN	4o Destination terminal
★	19	▲	GGNN	5I : GGNN	5i Input terminal
★	20	▲	GGNN	5O: GGNN	5o Destination terminal
★	21	▲	GGNN	6I : GGNN	6i Input terminal
★	22	▲	GGNN	6O: GGNN	6o Destination terminal
★	23	▲	GGNN	7I : GGNN	7i Input terminal
★	24	▲	GGNN	7O: GGNN	7o Destination terminal
★	25	▲	GGNN	8I : GGNN	8i Input terminal
★	26	▲	GGNN	8O: GGNN	8o Destination terminal
	31	▲	0, 1	D1: N	1i (Di 1) Discrete input
	32	▲	0, 1	D2: N	2i (Di 2) Discrete input
	33	▲	0, 1	D3: N	3i (Di 3) Discrete input
	34	▲	0, 1	D4: N	4i (Di 4) Discrete input
	35	▲	0, 1	D5: N	5i (Di 5) Discrete input
	36	▲	0, 1	D6: N	6i (Di 6) Discrete input
	37	▲	0, 1	D7: N	7i (Di 7) Discrete input
	38	▲	0, 1	D8: N	8i (Di 8) Discrete input

MODEL NO.	BLOCK NAME	MODEL NO.
88	Analog Signal Comparator	88

ABBR: ACP

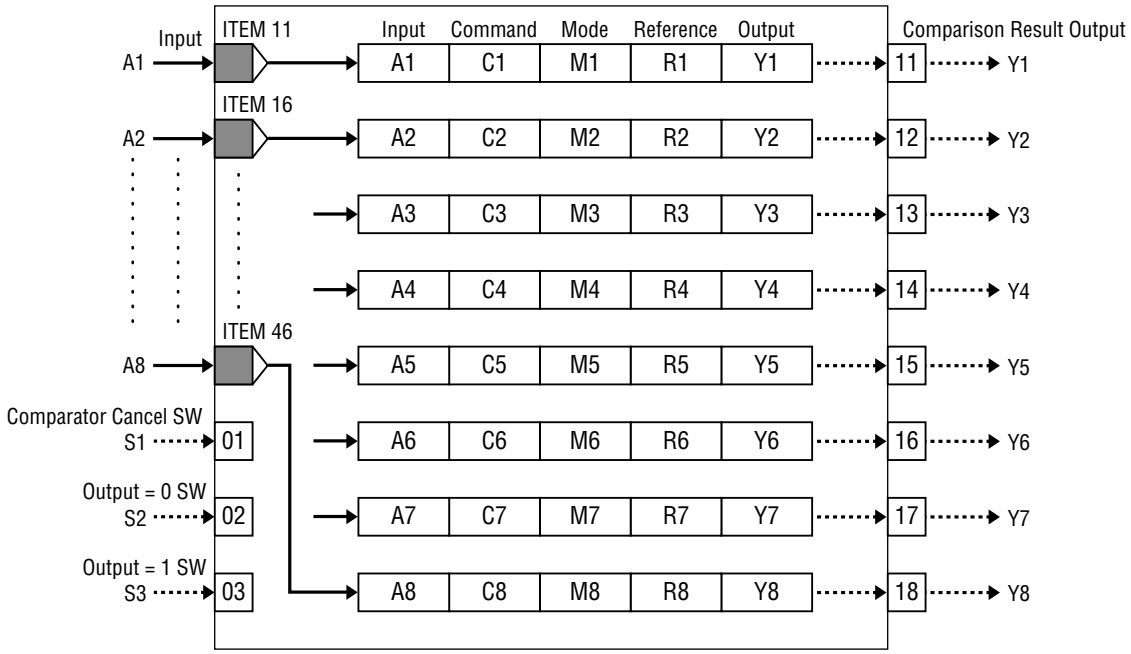

General Description

Used to compare an analog input with a preset parameter (reference) or with another analog input. 8 channels are available.

- Commands (Cn) 1 : [An] Larger than (>) [Rn]
  2 : [An] Equal to (=) [Rn]
  3 : [An] Smaller than (<) [Rn]
- References (Rn) With Mode (Mn) : 0, Reference (Rn) is a preset parameter (±115.00%)
  With Mode (Mn) : 1, Reference (Rn) is an input terminal number (GGNN).

GROUP [30 – 61] ★: Setting data

ITEM	MDFY	DATA INPUT	DISPLAY (e.g.)	CONTENTS
01	●	(always modifiable)		■ MAINTENANCE SWITCH (lock command)
		0	MT: 0	MONITOR mode: data monitoring only
		1	MT: 1	PROGRAM mode: "▲" marked data modifiable
02	IND	No input	ER: NN	Error indication (00: normal, 01 – 90: error)
03	▲	0, 1	S1: N	S1 Comparator cancel SW (1: cancel)
04	▲	0, 1	S2: N	S2 Output = 0 command SW
05	▲	0, 1	S3: N	S3 Output = 1 command SW
★ **10**	▲	**88**	**MD: 88**	**ANALOG SIGNAL COMPARATOR (model)** '-' to clear.
★ 11	▲	GGNN	A1: GGNN	A1 Input connection terminal (error if not connected and if C1 is not '0') GG: Group No. NN: terminal No.
★ 12	▲	0, 1, 2, 3	C1: N	C1 Command (0: none, 1: larger, 2: equal, 3: smaller)
★ 13	▲	0, 1	M1: N	M1 Mode (reference signal type) (0: % value, 1: connection terminal GGNN)
★ 14	▲	±115.00 % or GGNN	R1: NNNNNN	R1 Reference signal (% value or connection terminal) GG: Group No. NN: terminal No.
15	▲	0, 1	Y1: N	Y1 Comparison result output

	ITEM	MDFY	DATA INPUT	DISPLAY (e.g.)	CONTENTS	
★	16	▲	GGNN	A2: GGNN	A2	Input connection terminal GG: Group No. NN: terminal No.
★	17	▲	0, 1, 2, 3	C2: N	C2	Command (0: none, 1: larger, 2: equal, 3: smaller)
★	18	▲	0, 1	M2: N	M2	Mode (reference signal type) (0: % value, 1: connection terminal GGNN)
★	19	▲	±115.00 % or GGNN	R2: NNNNNN	R2	Reference signal (% value or connection terminal) GG: Group No. NN: terminal No.
	20	▲	0, 1	Y2: N	Y2	Comparison result output
★	21	▲	GGNN	A3: GGNN	A3	Input connection terminal GG: Group No. NN: terminal No.
★	22	▲	0, 1, 2, 3	C3: N	C3	Command (0: none, 1: larger, 2: equal, 3: smaller)
★	23	▲	0, 1	M3: N	M3	Mode (reference signal type) (0: % value, 1: connection terminal GGNN)
★	24	▲	±115.00 % or GGNN	R3: NNNNNN	R3	Reference signal (% value or connection terminal) GG: Group No. NN: terminal No.
	25	▲	0, 1	Y3: N	Y3	Comparison result output
★	26	▲	GGNN	A4: GGNN	A4	Input connection terminal GG: Group No. NN: terminal No.
★	27	▲	0, 1, 2, 3	C4: N	C4	Command (0: none, 1: larger, 2: equal, 3: smaller)
★	28	▲	0, 1	M4: N	M4	Mode (reference signal type) (0: % value, 1: connection terminal GGNN)
★	29	▲	±115.00 % or GGNN	R4: NNNNNN	R4	Reference signal (% value or connection terminal) GG: Group No. NN: terminal No.
	30	▲	0, 1	Y4: N	Y4	Comparison result output
★	31	▲	GGNN	A5: GGNN	A5	Input connection terminal GG: Group No. NN: terminal No.
★	32	▲	0, 1, 2, 3	C5: N	C5	Command (0: none, 1: larger, 2: equal, 3: smaller)
★	33	▲	0, 1	M5: N	M5	Mode (reference signal type) (0: % value, 1: connection terminal GGNN)
★	34	▲	±115.00 % or GGNN	R5: NNNNNN	R5	Reference signal (% value or connection terminal) GG: Group No. NN: terminal No.
	35	▲	0, 1	Y5: N	Y5	Comparison result output
★	36	▲	GGNN	A6: GGNN	A6	Input connection terminal GG: Group No. NN: terminal No.
★	37	▲	0, 1, 2, 3	C6: N	C6	Command (0: none, 1: larger, 2: equal, 3: smaller)
★	38	▲	0, 1	M6: N	M6	Mode (reference signal type) (0: % value, 1: connection terminal GGNN)
★	39	▲	±115.00 % or GGNN	R6: NNNNNN	R6	Reference signal (% value or connection terminal) GG: Group No. NN: terminal No.
	40	▲	0, 1	Y6: N	Y6	Comparison result output
★	41	▲	GGNN	A7: GGNN	A7	Input connection terminal GG: Group No. NN: terminal No.
★	42	▲	0, 1, 2, 3	C7: N	C7	Command (0: none, 1: larger, 2: equal, 3: smaller)
★	43	▲	0, 1	M7: N	M7	Mode (reference signal type) (0: % value, 1: connection terminal GGNN)
★	44	▲	±115.00 % or GGNN	R7: NNNNNN	R7	Reference signal (% value or connection terminal) GG: Group No. NN: terminal No.
	45	▲	0, 1	Y7: N	Y7	Comparison result output
★	46	▲	GGNN	A8: GGNN	A8	Input connection terminal GG: Group No. NN: terminal No.
★	47	▲	0, 1, 2, 3	C8: N	C8	Command (0: none, 1: larger, 2: equal, 3: smaller)
★	48	▲	0, 1	M8: N	M8	Mode (reference signal type) (0: % value, 1: connection terminal GGNN)
★	49	▲	±115.00 % or GGNN	R8: NNNNNN	R8	Reference signal (% value or connection terminal) GG: Group No. NN: terminal No.
	50	▲	0, 1	Y8: N	Y8	Comparison result output

MODEL NO.	BLOCK NAME	MODEL NO.
89	Annunciator	89

ABBR: ANN

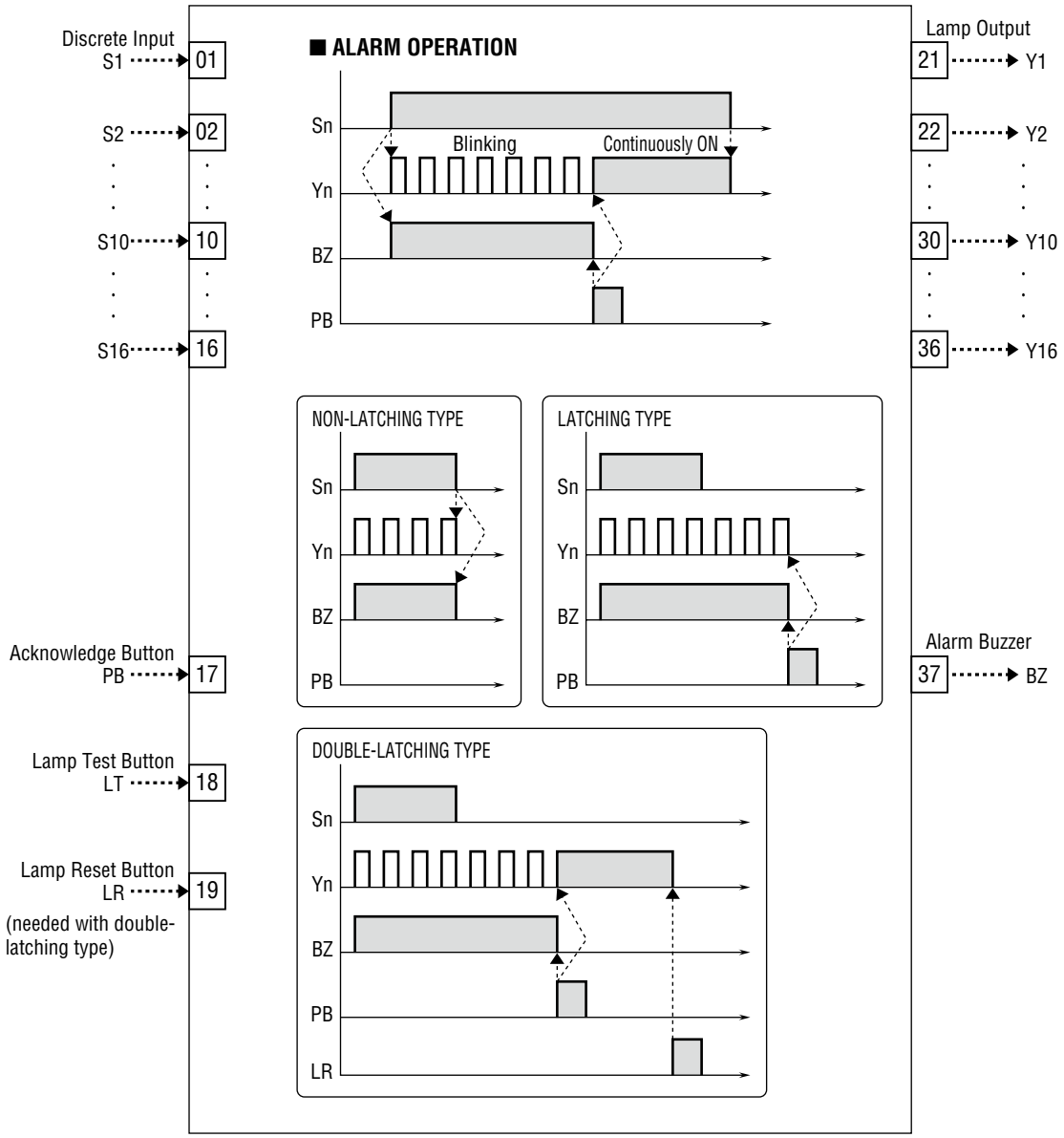

Lamp output Yn resetting by lamp reset button LR is valid only when Sn input is in normal status.

General Description: Annunciator block for alarm.

1. Discrete input mode

- Normally Open (N.O.): Abnormality when the contact is turned on. ➔ Lamp starts blinking.
- Normally Closed (N.C.): Abnormality when the contact is turned off. ➔ Lamp starts blinking.

2. Alarm mode

- Non-Latching: If the discrete input is back to normal, the lamp stops blinking and the buzzer sound turns off even before the Acknowledge button is turned on.
- Latching: Even after the discrete input is back to normal, the lamp continues blinking and the buzzer sound continues until the Acknowledge button is turned on.
- Double-Latching: Even after the discrete input is back to normal, the lamp continues blinking and the buzzer sound continues until the Acknowledge button is turned on. When the Acknowledge button is pressed after the discrete input has been back to normal, the lamp remains on (continuously) until the Lamp Reset button is pressed.

3. First-out function

First-out function is used to find the discrete contact signal which turned first among several.
The lamp for the one which turned in the first computation cycle blinks though the lamps for the others which turned in the following computation cycles are continuously on. When the Acknowledge button is pressed, the lamp for the first one stops blinking.
When a new series of alarm is triggered, the lamps changes status according to the First-Out function.
This function is available for Latching and Double-Latching alarm modes.

4. Communication terminal assignment of the I/O contacts.

• Discrete inputs/lamp outputs can be assigned in 16-point unit to a Di Receive Terminal or Do Send Terminal.

GROUP [30 – 61] ◆: Automatically changeable parameters ★: Setting data

ITEM	MDFY	DATA INPUT	DISPLAY (e.g.)	CONTENTS
01	●	(always modifiable)		■ MAINTENANCE SWITCH (lock command)
		0	MT: 0	MONITOR mode: data monitoring only
		1	MT: 1	PROGRAM mode: "▲" marked data modifiable
02	IND	No input	ER: NN	Error indication (00: normal, 01 – 90: error)
★ **10**	▲	**89**	**MD: 89**	**ANNUNCIATOR (model)** '-' to clear.
★ 11	▲	0, 1	SM: N	Discrete input mode (0: N.O., 1: N.C.)
★ 12	▲	0, 1, 2	MD: N	Alarm mode (0: non-latching, 1: latching, 2: double-latching)
★ 13	▲	0, 1	FO: N	First-Out (0: without, 1: with)
◆★14	▲	1 – 64	CP: NN	Lamp ON-OFF time (multiple of computation cycle)
★ 15	▲	00, 11 – 26	SN: NN	Group No. of Communication Terminal for discrete inputs (S1 – S16) (00: without)
★ 16	▲	0, 1	SP: N	Assigned group of Communication Terminal for discrete inputs (S1 – S16) (0: 1 – 16, 1: 17 – 32)
★ 17	▲	0, 1	SS: N	Assignment of pushbutton input to Communication Terminal (0: without, 1: with) (Remark 1)
★ 18	▲	00, 11 – 26	YN: NN	Group No. of Communication Terminal for discrete outputs (Y1 – Y16) (00: without)
★ 19	▲	0, 1	YP: N	Assigned group of Communication Terminal for discrete outputs (Y1 – Y16) (0: 1 – 16, 1: 17 – 32)
★ 20	▲	0, 1	YS: N	Assignment of buzzer output to Communication Terminal (0: without, 1: with) (Remark 2)
21	▲	0, 1	01: N	S 1 Discrete input indication
22	▲	0, 1	02: N	S 2 :
:	:	:	:	: :
:	:	:	:	: :
30	▲	0, 1	10: N	S10 :
:	:	:	:	: :
36	▲	0, 1	16: N	S16 :
37	▲	0, 1	17: N	Acknowledge button PB
38	▲	0, 1	18: N	Lamp test button LT
39	▲	0, 1	19: N	Lamp reset button LR
41	▲	0, 1	21: N	Y 1 Lamp output indication
42	▲	0, 1	22: N	Y 2 :
:	:	:	:	: :
:	:	:	:	: :
50	▲	0, 1	30: N	Y10 :
:	:	:	:	: :
56	▲	0, 1	36: N	Y16 :
57	▲	0, 1	37: N	Alarm buzzer sound BZ

Remark 1: With ITEM 17 'Assignment of pushbutton input to Communication Terminal' set to '1: with', the pushbutton is assigned to a discrete input next to S1...S16, i.e. the 17th terminal of Di Receive Terminal or Do Send Terminal (assign lamp test button for 18th, assign lamp reset button for 19th). In this case, ITEM 16 must be set to '0: 1 – 16'.

Remark 2: With ITEM 20 'Assignment of buzzer output to Communication Terminal' set to '1: with', the buzzer is assigned to a lamp output next to Y1... Y16, i.e. the 17th terminal of Do Send Terminal. In this case, ITEM 19 must be set to '0: 1 – 16'.

MODEL NO.	BLOCK NAME	MODEL NO.
90	ON-OFF Timer	90

ABBR: TMC

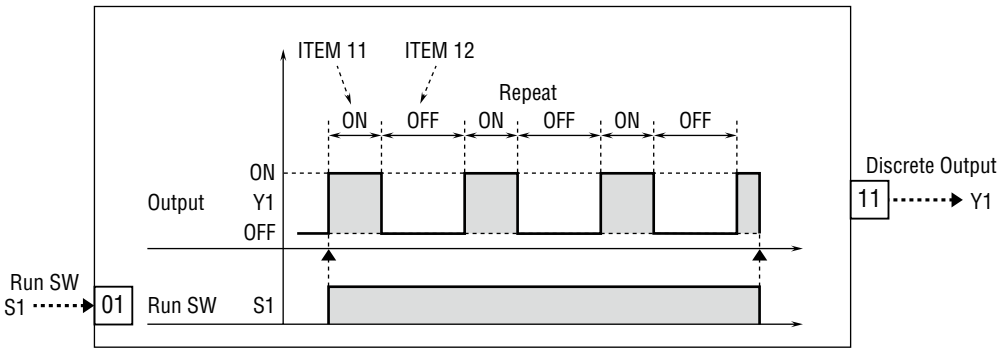

General Description

The discrete output Y1 is turned on/off repeatedly in the preset time duration.

- The minimum duration is 0.1 second, provided it is longer than the computation cycle.
- While Run SW S1 is set to '1', the Y1 is turned on/off repeatedly.

GROUP [30 – 61] ◆: Automatically changeable parameters ★: Setting data

ITEM	MDFY	DATA INPUT	DISPLAY (e.g.)	CONTENTS
01	●	(always modifiable)		■ MAINTENANCE SWITCH (lock command)
		0	MT: 0	MONITOR mode: data monitoring only
		1	MT: 1	PROGRAM mode: "▲" marked data modifiable
02	IND	No input	ER: NN	Error indication (00: normal, 01 – 90: error)
03	▲	0 – 10000	OT: NNNNN	Elapsed ON time count
04	▲	0 – 10000	FT: NNNNN	Elapsed OFF time count
05	▲	0, 1	S1: N	S1 Run SW (1: run)
06	▲	0, 1	Y1: N	Y1 Discrete output
★ **10**	▲	**90**	**MD: 90**	**ON-OFF TIMER (model)** '-' to clear.
◆★11	▲	0 – 10000	ON: NNNNN	ON time setting
◆★12	▲	0 – 10000	OF: NNNNN	OFF time setting
★ 13	▲	0, 1, 2, 3	TU: N	TU Time unit (0: sec, 1: min, 2: hour, 3: 0.1 sec)

MODEL NO.	BLOCK NAME	MODEL NO.
91	Timer	91

ABBR: TMR

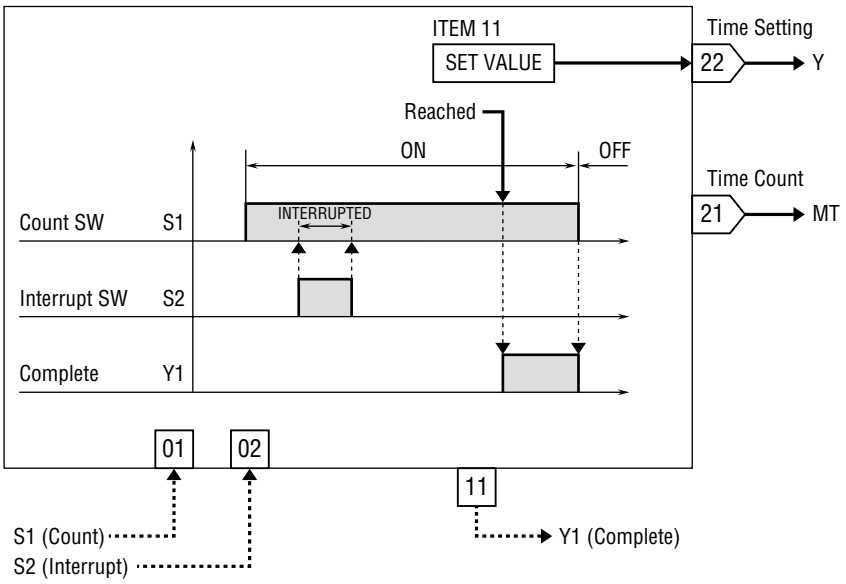

General Description

Used to count number of pulse rises of the internal clock (every 0.1 sec.) and output Complete status signal Y1 ON ('1') when it reaches the setpoint.

The counter can be started by turning on the S1 to '1', and be reset by turning it off ('0'). Counting is halted when the S2 is set to '1'.

The minimum resolution when the time unit (TU) is set to 'seconds' is equal to the computation cycle. When the cycle is 0.12 second, the minimum resolution will be 0.25 second.

GROUP [30 – 61] ◆: Automatically changeable parameters ★: Setting data

ITEM	MDFY	DATA INPUT	DISPLAY (e.g.)	CONTENTS
01	●	(always modifiable)		■ MAINTENANCE SWITCH (lock command)
		0	MT: 0	MONITOR mode: data monitoring only
		1	MT: 1	PROGRAM mode: "▲" marked data modifiable
02	IND	No input	ER: NN	Error indication (00: normal, 01 – 90: error)
03	▲	0 – 10000	MT: NNNNN	MT Elapsed time count
04	▲	0, 1	S1: N	S1 Count SW (0: reset, 1: count)
05	▲	0, 1	S2: N	S2 Interrupt SW (1: interrupt)
06	▲	0, 1	Y1: N	Y1 Complete status
★ **10**	▲	**91**	**MD: 91**	**TIMER (model)** '-' to clear.
◆★11	▲	0 – 10000	Y: NNNNN	Y Time setting
★ 12	▲	0, 1, 2, 3	TU: N	TU Time unit (0: sec, 1: min, 2: hour, 3: 0.1 sec)

MODEL NO.	BLOCK NAME	MODEL NO.
92	Counter	92

ABBR: CTR

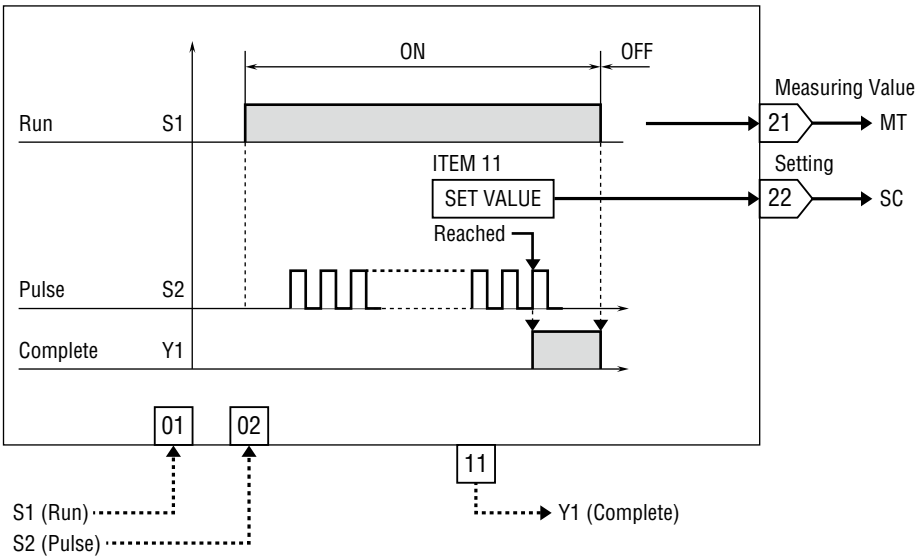

General Description

Used to count number of pulse rises of input signal while Run SW S1 is on ('1'). When it reaches the setpoint, it outputs Complete status signal Y1 ON ('1').
The Y1 signal is reset by turning off the S1 ('0').

GROUP [30 – 61] ◆: Automatically changeable parameters ★: Setting data

ITEM	MDFY	DATA INPUT	DISPLAY (e.g.)	CONTENTS
01	●	(always modifiable)		■ MAINTENANCE SWITCH (lock command)
		0	MT: 0	MONITOR mode: data monitoring only
		1	MT: 1	PROGRAM mode: "▲" marked data modifiable
02	IND	No input	ER: NN	Error indication (00: normal, 01 – 90: error)
03	▲	0 – 10000	MT: NNNNN	MT Count value
04	▲	0, 1	S1: N	S1 Run SW (0: reset, 1: run)
05	▲	0, 1	S2: N	S2 Pulse input SW
06	▲	0, 1	Y1: N	Y1 Complete status
★ **10**	▲	**92**	**MD: 92**	**COUNTER (model)** '-' to clear.
◆★11	▲	0 – 10000	SC: NNNNN	SC Count setting

MODEL NO.	BLOCK NAME	MODEL NO.
93	Internal Switch	93

ABBR: ISW

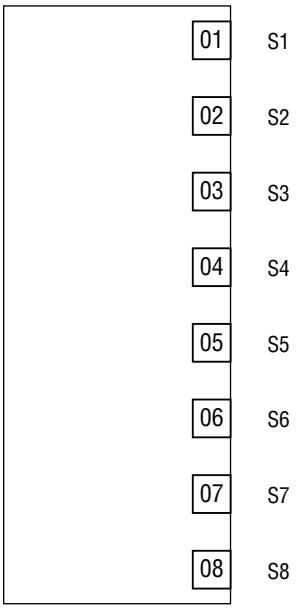

General Description

The block is used in a sequential control to store calculation status of a logic calculation in progress.

GROUP [30 – 61] ◆: Automatically changeable parameters ★: Setting data

ITEM	MDFY	DATA INPUT	DISPLAY (e.g.)	CONTENTS
01	●	(always modifiable)		■ MAINTENANCE SWITCH (lock command)
		0	MT: 0	MONITOR mode: data monitoring only
		1	MT: 1	PROGRAM mode: "▲" marked data modifiable
02	IND	No input	ER: NN	Error indication (00: normal, 01 – 90: error)
★ **10**	▲	**93**	**MD: 93**	**INTERNAL SWITCH (model)** '-' to clear.
◆ 11	▲	0, 1	01: N	S1 Internal switch
◆ 12	▲	0, 1	02: N	S2 Internal switch
◆ 13	▲	0, 1	03: N	S3 Internal switch
◆ 14	▲	0, 1	04: N	S4 Internal switch
◆ 15	▲	0, 1	05: N	S5 Internal switch
◆ 16	▲	0, 1	06: N	S6 Internal switch
◆ 17	▲	0, 1	07: N	S7 Internal switch
◆ 18	▲	0, 1	08: N	S8 Internal switch

MODEL NO.	BLOCK NAME	MODEL NO.
94	System's Internal Switch	94

ABBR: SSW

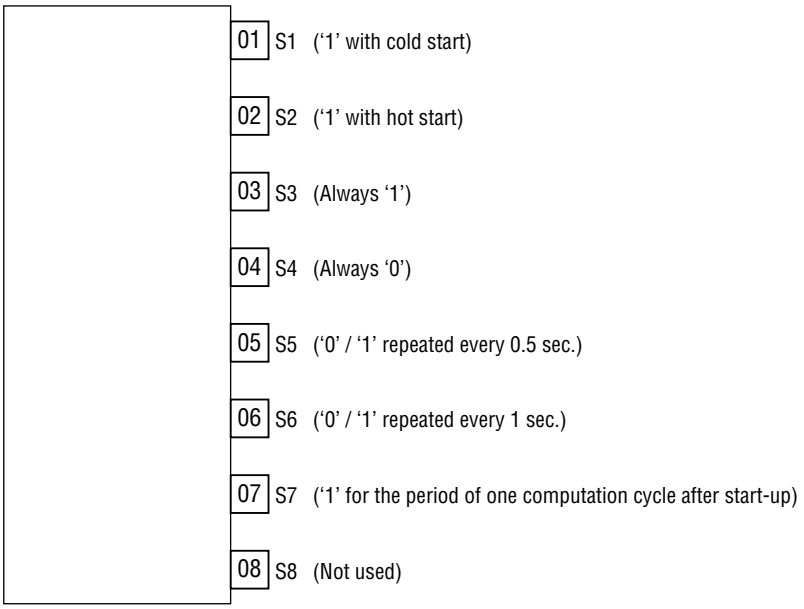

General Description

The system determines the most appropriate switch status for the user's application.

GROUP [80]

ITEM	MDFY	DATA INPUT	DISPLAY (e.g.)	CONTENTS
10	▲	**94**	**MD: 94**	**SYSTEM'S INTERNAL SWITCH (model)** '-' to clear.
11	IND	0, 1	01: N	S1 '1' with cold start
12	IND	0, 1	02: N	S2 '1' with hot start
13	IND	1	03: 1	S3 Always '1'
14	IND	0	04: 0	S4 Always '0'
15	IND	0, 1	05: N	S5 '0' / '1' repeated every 0.5 second
16	IND	0, 1	06: N	S6 '0' / '1' repeated every 1 second
17	IND	0, 1	07: N	S7 '1' for the period of one computation cycle after start-up
18	IND	0, 1	08: N	S8 Reserved for the system

Note: The System's Internal Switch block, registered in Group 80 at default setting, cannot be deleted.

MODEL NO.	BLOCK NAME	MODEL NO.
95	Sequential Control Program	95

ABBR: SEQ

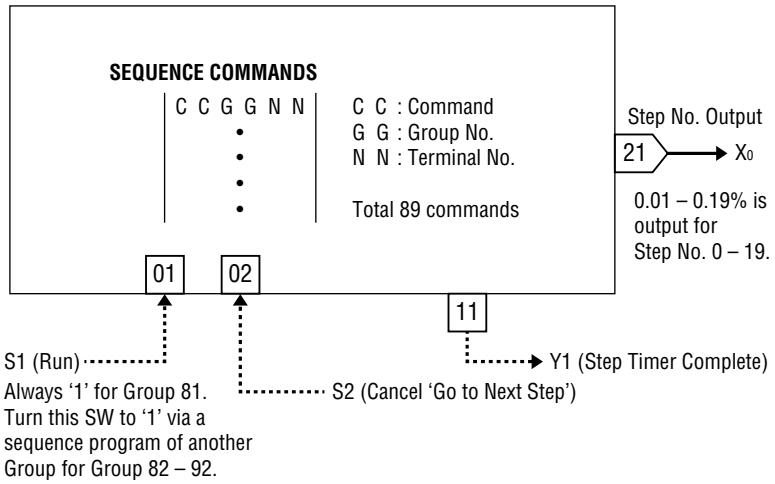

General Description

The block is used for relay sequence control and step sequence control by utilizing sequence commands.

GROUP [81 – 92] ★: Setting data

ITEM	MDFY	DATA INPUT	DISPLAY (e.g.)	CONTENTS
01	●	(always modifiable)		■ MAINTENANCE SWITCH (lock command)
		0	MT: 0	MONITOR mode: data monitoring only
		1	MT: 1	PROGRAM mode: "▲" marked data modifiable
02	IND	No input	ER: NN	Error indication (00: normal, 01 – 90: error)
03	▲	00 – 19	ST: NN	Step No.
04	▲	0 – 999 s	TS: NNN	Step timer setting
05	▲	0 – 999 s	TM: NNN	Elapsed step timer count
06	▲	0, 1	S1: N	S1 Run SW
07	▲	0, 1	S2: N	S2 Cancel 'go to next step' SW
08	▲	0, 1	Y1: N	Y1 Step timer complete status
★ **10**	▲	**95**	**MD: 95**	**SEQUENTIAL CONTROL PROGRAM** (model) '-' to clear.
★ 11	▲	CCGGNN	13: 0000	Sequence command (Step Command for ITEM 11)
★ 12	▲	CCGGNN	CC: GGNN	:
:	:	:	:	: CC: Command
:	:	:	:	: GG: Group No.
★ 99	▲	CCGGNN	CC: GGNN	: NN: Terminal No.

■ Command List

FUNCTION	ABBR	COMMAND CC	GG	NN	EXPLANATION
END	ED	00	00	00	End of a block (described in the last ITEM)
CONDITIONING COMMANDS					
INPUT	IN	01	GG	NN	The first contact in a relay circuit
INPUT NOT	NI	02	GG	NN	The first contact in a relay circuit (true in an opposite condition)
AND	AD	03	GG	NN	Series contact in a relay circuit
AND NOT	NA	04	GG	NN	Series contact in a relay circuit (true in an opposite condition)
OR	OR	05	GG	NN	Parallel contact in a relay circuit
OR NOT	NR	06	GG	NN	Parallel contact in a relay circuit (true in an opposite condition)
OUTPUT COMMANDS					
OUTPUT	OT	07	GG	NN	Equivalent to a coil in a relay circuit
OUTPUT NOT	NO	08	GG	NN	Equivalent to a coil in a relay circuit (true in an opposite condition)
OUTPUT ON	ON	09	GG	NN	Equivalent to a set coil in a relay circuit
OUTPUT OFF	OF	10	GG	NN	Equivalent to a reset coil in a relay circuit
OUTPUT SHOT	SH	11	GG	NN	One-shot output in a relay circuit • Turned on for the duration of only one computation cycle. • Max. 100 types of outputs in all Groups.
BRANCH COMMAND					
BRANCH	BR	12	GG	SS	If condition is true, go to a specified step in a specified block (GG: block No., SS: step No.) SS: 01 – 19
		12	00	SS	If condition is true, go to a specified step in the same block (GG = 00, 00 specifies the same block) SS: 01 – 19
STEP COMMAND					
STEP	ST	13	00	SS	Declare step No. (SS: step No., 00 – 19) • Any number can be assigned for SS. Used in order from the smallest number. • SS: 00 Operates at any time (relay sequence) • SS: 01 – 19 Either one of SS's operates (step sequence)
STEP TIMER					
TIMER	TM	14	U	NNN	Step timer Timer type 0: ON-delay timer (to the following step when completed. A BRANCH command prevails if it comes before the time elapsed. Invalid if a BRANCH command with no condition is used.) 1: Step watch timer (Y1 = 1 when completed) Time setting (0 – 999 seconds)
NOP	NP	15	00	00	No control operation (used when you need to delete commands without changing other ITEM No.s)

■ **Configuration of 12 Sequential Control Blocks**

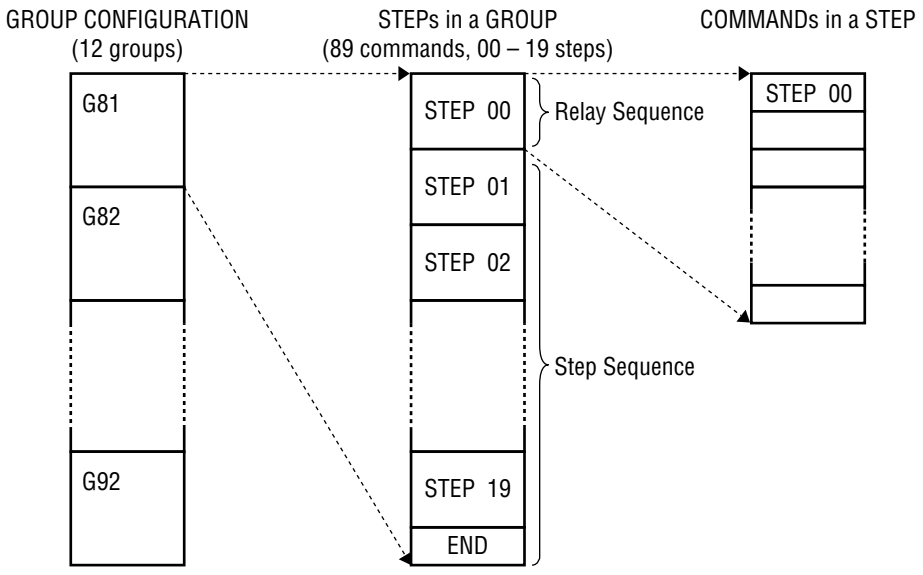

LINKING BETWEEN GROUPS

If you need for your program more than available 89 commands in one Group, you can link between one Group and another. Total 1,068 commands are available if all Groups are linked.

- Relay Sequence (Step 00): Results at a certain stage of sequence are written in the Internal Switch block. These results are picked up as input to another Group so that it continues the sequence.
- Step Sequence (Step 01 – 19): A Branch command is used to link with another Group. Only Steps 01 – 19 are available for linking.

S1 (RUN SW)

- The S1 for Group 81 are always set to '1'. The ones for Group 82 – 92 are set to '0' at the start. A command from another sequence program turn the S1 to '1' when it is used.
- With S1 at '1', Step 00 and 01 starts operating.
- With S1 at '0', the operation is stopped and returns to Step 01.

S2 (cancel 'Go to next step' SW)

- With S2 at '1', the operation continues within the step currently in operation.
- With S2 at '0', the operation restarts where it was stopped.
- In a step sequence, the S2 is turned to '1' when the operation is branched to another Group.
- In a step sequence, the S2 is turned to '0' before the operation is branched to another Group if the S2 of this another group is set to '1'.

■ **Example of Sequence Control Program**

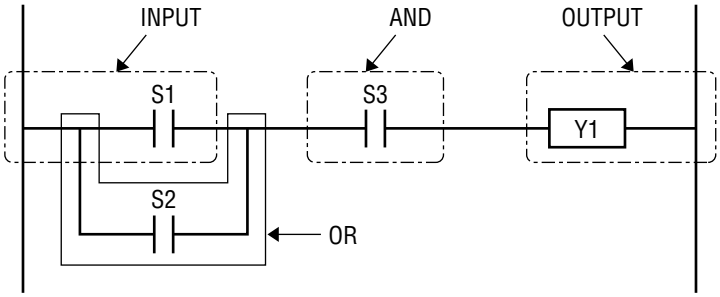

Describing Terminal No. (e.g. 0111)

ITEM	DATA				
11	13	0000	STEP	00	Declaring STEP 00. Used always.
12	01	GGNN	INPUT	S1	
13	05	GGNN	OR	S2	
14	03	GGNN	AND	S3	
15	07	GGNN	OUTPUT	Y1	
16	00	0000	END		END command at the end of ITEM.

■ **Processing a Logic Operation Command without Input Address**

Conditioning commands without input (GGNN = 0000) address are used in case of the following:
Max. 8 INPUT, INPUT NOT commands can be used in series. Operations between registers are executed in order from the last programmed register No.

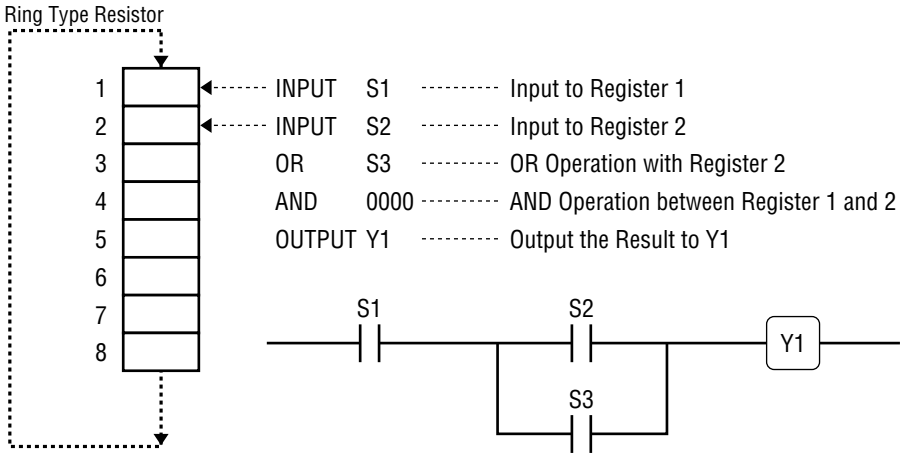

■ Operation Example within One Step

(1) 1 step command

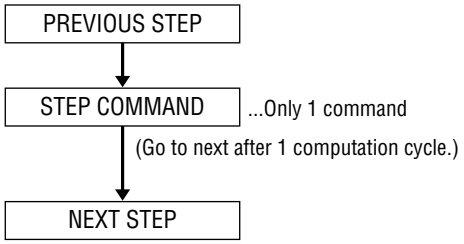

(2) 1 step timer

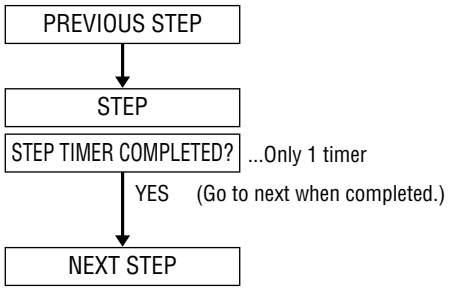

(3) Step with output only

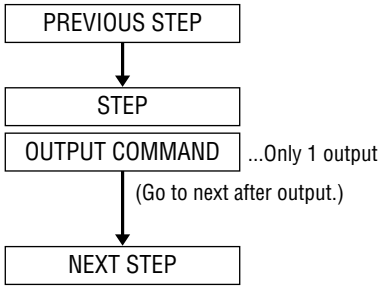

(4) Step with conditioning only

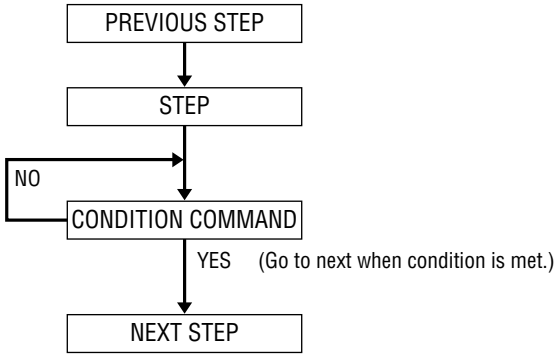

(5) Describing condition after output

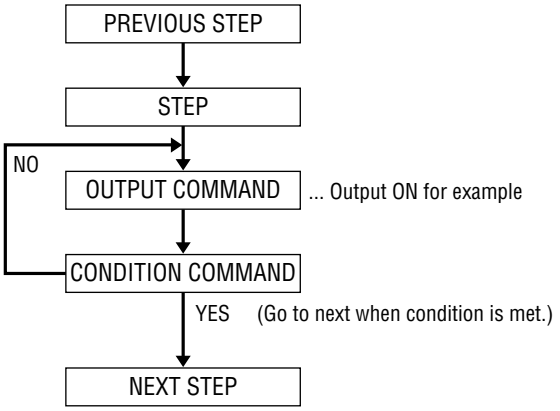

(6) Describing output after conditioning

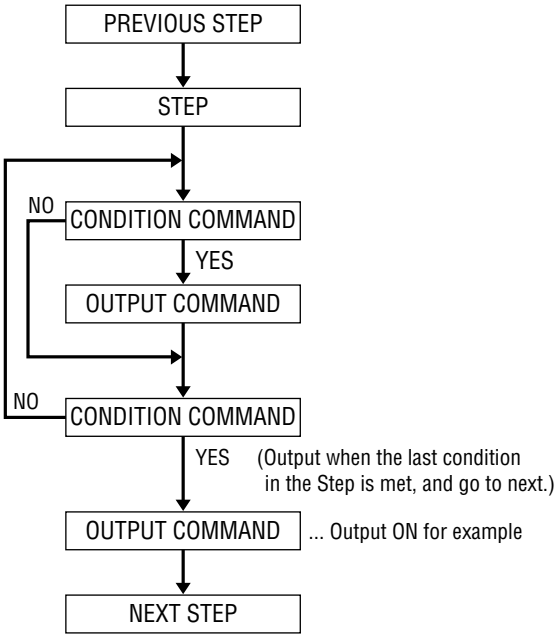

(7) Branching with multiple conditions

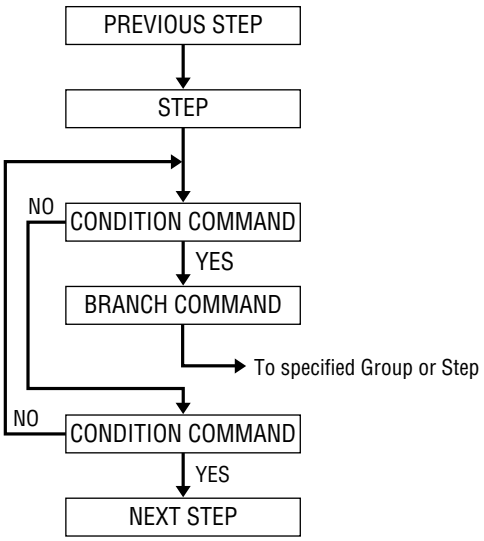

3. FIELD TERMINAL BLOCKS

ABBR	MODEL NO.	I/O TYPE
F70	SC100	Ai 6 + Ao 4 + Di/Pi 6 + Do 6
		Field Terminal
		Extension Field Terminal 1
		Extension Field Terminal 2
F71	SC200	Ai 6 + Ao 4 + Di/Pi 6 + Do 6
		Field Terminal
		Extension Field Terminal 1
		Extension Field Terminal 2
F72	SC110	Ai 6 + Ao 4 + Di/Pi 6 + Do 6
		Field Terminal
		Extension Field Terminal 1
		Extension Field Terminal 2
F73	SC210	Ai 6 + Ao 4 + Di/Pi 6 + Do 6
		Field Terminal
		Extension Field Terminal 1
		Extension Field Terminal 2
F24	SML-A4	Di 8
F25	SML-C7	Do 8
F25	SML-C8	Do 8
F26	SML-E5	Di 4 + Do 4
F27	SML-G3	Ai 8
F28	SML-G4	Ai 4
F29	SML-M4	Ao 4
F14	SML-P4	Pi 4
F31	SML-R3	Ai 4 + Ao 4
F32	SML-S5	Ai 4 + Di 4
F33	SML-S6	Ao 4 + Do 4

SC100 Field Terminal

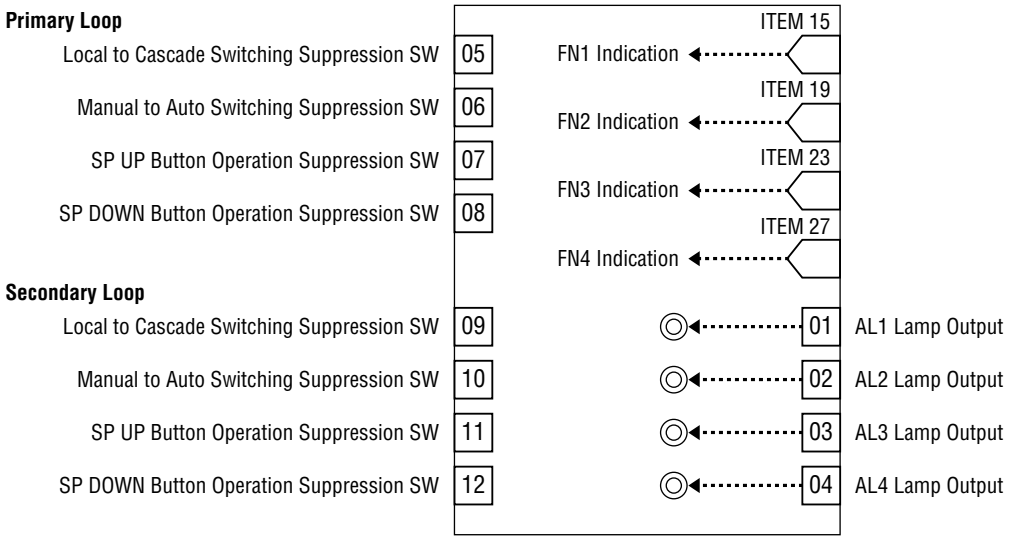

GROUP [01] ★: Setting data

ITEM	MDFY	DATA INPUT	DISPLAY (e.g.)	CONTENTS
01	●	(always modifiable)		■ MAINTENANCE SWITCH (lock command) Same mode for Extension Field Terminal 1 and 2
		0	MT: 0	MONITOR mode: data monitoring only
		1	MT: 1	PROGRAM mode: "▲" marked data modifiable
		S	MT: S	SIMULATION mode: "❄" marked data modifiable
02	IND	No input	ER: NN	Error indication (00: normal, 01 – 90: error) Extension Field Terminal 1 and 2 included
10	**IND**	**11**	**MD: 11**	**FIELD TERMINAL (model)**
INDICATION				
★ 11	▲	2, 3	GR: 2	Primary loop Group No. (valid after reset)
★ 12	▲	0, 1	M1: N	Primary MV operational range (0: ±115%, 1: -15 – +115%)
★ 13	▲	0, 1	M2: N	Secondary MV operational range (0: ±115%, 1: -15 – +115%)
★ 15	▲	GGNN	1F: 3121	FN1 connection terminal for indication GG: Group No. NN: terminal No.
★ 16	▲	±32000	1H: 15000	FN1 upper range (in engineering unit)
★ 17	▲	±32000	1L: 0	FN1 lower range (in engineering unit)
★ 18	▲	0, 1, 2, 3, 4, 5	1D: 1	FN1 decimal point position (from rightmost digit)
★ 19	▲	GGNN	2F: GGNN	FN2 connection terminal for indication GG: Group No. NN: terminal No.
★ 20	▲	±32000	2H: NNNNN	FN2 upper range (in engineering unit)
★ 21	▲	±32000	2L: NNNNN	FN2 lower range (in engineering unit)
★ 22	▲	0, 1, 2, 3, 4, 5	2D: N	FN2 decimal point position (from rightmost digit)
★ 23	▲	GGNN	3F: GGNN	FN3 connection terminal for indication GG: Group No. NN: terminal No.
★ 24	▲	±32000	3H: NNNNN	FN3 upper range (in engineering unit)
★ 25	▲	±32000	3L: NNNNN	FN3 lower range (in engineering unit)
★ 26	▲	0, 1, 2, 3, 4, 5	3D: N	FN3 decimal point position (from rightmost digit)
★ 27	▲	GGNN	4F: GGNN	FN4 connection terminal for indication GG: Group No. NN: terminal No.
★ 28	▲	±32000	4H: NNNNN	FN4 upper range (in engineering unit)
★ 29	▲	±32000	4L: NNNNN	FN4 lower range (in engineering unit)
★ 30	▲	0, 1, 2, 3, 4, 5	4D: N	FN4 decimal point position (from rightmost digit)

ITEM	MDFY	DATA INPUT	DISPLAY (e.g.)	CONTENTS
★ 31	▲	alphanumeric	T1: XXX...X	FN1 tag name (max. 10 characters)
★ 32	▲	alphanumeric	T2: XXX...X	FN2 tag name (max. 10 characters)
★ 33	▲	alphanumeric	T3: XXX...X	FN3 tag name (max. 10 characters)
★ 34	▲	alphanumeric	T4: XXX...X	FN4 tag name (max. 10 characters)
★ 35	▲	alphanumeric	U1: XXX...X	FN1 engineering unit (max. 8 characters)
★ 36	▲	alphanumeric	U2: XXX...X	FN2 engineering unit (max. 8 characters)
★ 37	▲	alphanumeric	U3: XXX...X	FN3 engineering unit (max. 8 characters)
★ 38	▲	alphanumeric	U4: XXX...X	FN4 engineering unit (max. 8 characters)
39	▲ ❄	0, 1	01: N	AL1 lamp output
40	▲ ❄	0, 1	02: N	AL2 lamp output
41	▲ ❄	0, 1	03: N	AL3 lamp output
42	▲ ❄	0, 1	04: N	AL4 lamp output
★ 43	▲	alphanumeric	L1: XXXX	AL1 comment (max. 4 characters)
★ 44	▲	alphanumeric	L2: XXXX	AL2 comment (max. 4 characters)
★ 45	▲	alphanumeric	L3: XXXX	AL3 comment (max. 4 characters)
★ 46	▲	alphanumeric	L4: XXXX	AL4 comment (max. 4 characters)
CONTROL				
Primary Loop				
51	▲ ❄	0, 1	05: N	Local to Cascade switching suppress. SW (0: permit, 1: prohibit)
52	▲ ❄	0, 1	06: N	Manual to Auto switching suppress. SW (0: permit, 1: prohibit)
53	▲ ❄	0, 1	07: N	SP UP button operation suppress. SW (0: permit, 1: prohibit)
54	▲ ❄	0, 1	08: N	SP DOWN button operation suppress. SW (0: permit, 1: prohibit)
Secondary Loop				
55	▲ ❄	0, 1	09: N	Local to Cascade switching suppress. SW (0: permit, 1: prohibit)
56	▲ ❄	0, 1	10: N	Manual to Auto switching suppress. SW (0: permit, 1: prohibit)
57	▲ ❄	0, 1	11: N	SP UP button operation suppress. SW (0: permit, 1: prohibit)
58	▲ ❄	0, 1	12: N	SP DOWN button operation suppress. SW (0: permit, 1: prohibit)
Common Items				
61	▲	0, 1	21: 0	SP UP button operation status (0: OFF, 1: ON) SC 1.70
62	▲	0, 1	22: 0	SP DOWN button operation status (0: OFF, 1: ON) SC 1.70
63	▲	0, 1	23: 0	MV UP button operation status (0: OFF, 1: ON) SC 1.70
64	▲	0, 1	24: 0	MV DOWN button operation status (0: OFF, 1: ON) SC 1.70
★ 71	▲	10 – 100 s/100%	ST: 40	Time of holding SP UP or DOWN button SC 1.70
★ 72	▲	10 – 100 s/100%	ST: 40	Time of holding MV UP or DOWN button SC 1.70

Remark 1: ITEM 61 – 64: Please perform button operations with two times more than computation cycle.
Remark 2: ITEM 61 – 64: Obtains button operation status regardless of screen functions such as A/M and C/L.

SC100 Extension Field Terminal 1

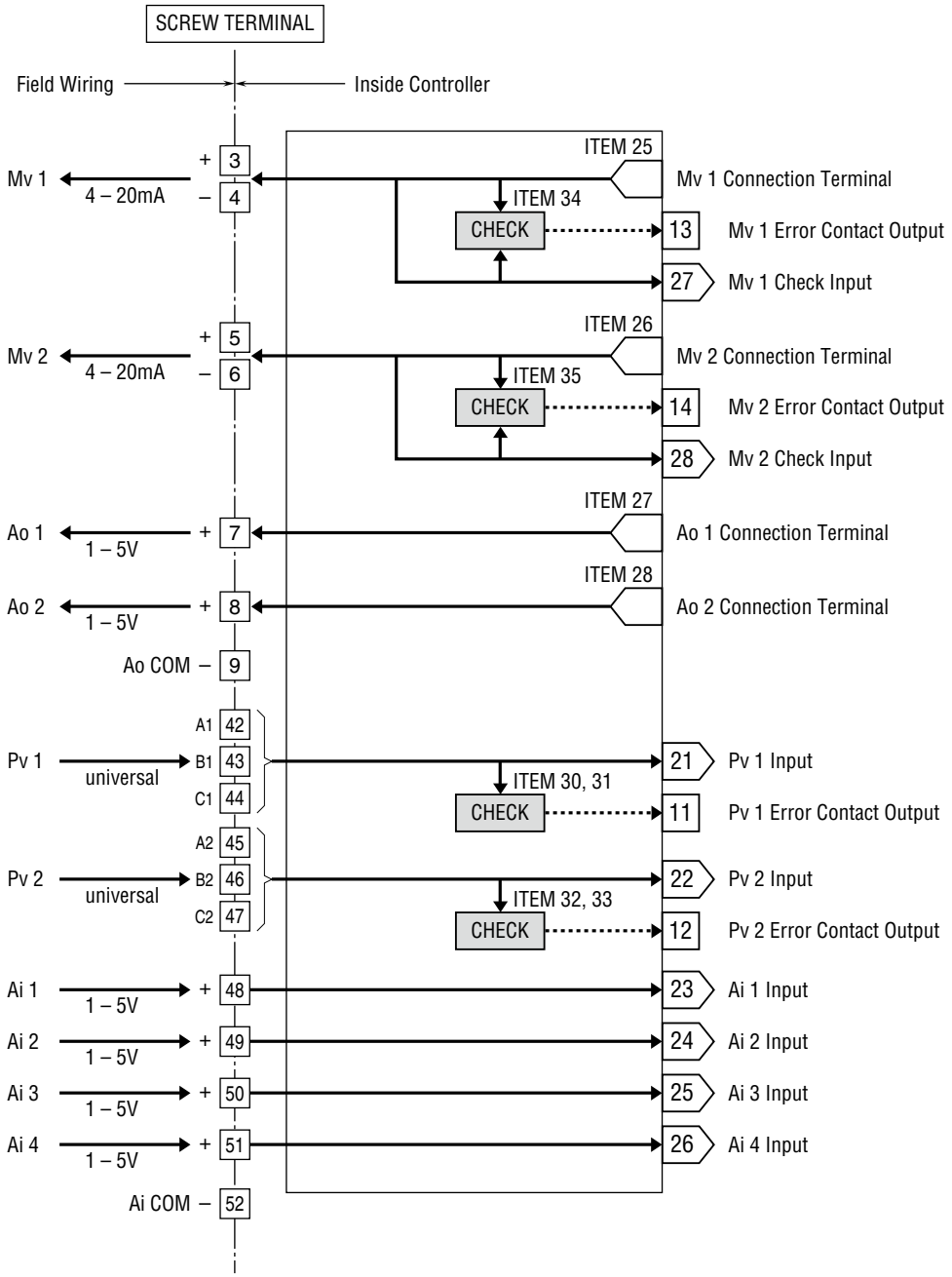

ITEM 02 has no error indication. It is indicated in GROUP 01 (Field Terminal).

GROUP [04] ★: Setting data

ITEM	MDFY	DATA INPUT	DISPLAY (e.g.)	CONTENTS
01	●	(always modifiable)		■ MAINTENANCE SWITCH (lock command) Same mode for Extension Field Terminal 1 and 2
		0	MT: 0	MONITOR mode: data monitoring only
		1	MT: 1	PROGRAM mode: "▲" marked data modifiable
		S	MT: S	SIMULATION mode: "❄" marked data modifiable
10	**IND**	**12**	**MD: 12**	**EXTENSION FIELD TERMINAL 1 (model)**
ANALOG INPUT INDICATION				
11	▲ ❄	-15.00 – 115.00 %	21: NNN.NN	Pv 1 input
12	▲ ❄	-15.00 – 115.00 %	22: NNN.NN	Pv 2 input
13	▲ ❄	-15.00 – 115.00 %	23: NNN.NN	Ai 1 input
14	▲ ❄	-15.00 – 115.00 %	24: NNN.NN	Ai 2 input
15	▲ ❄	-15.00 – 115.00 %	25: NNN.NN	Ai 3 input
16	▲ ❄	-15.00 – 115.00 %	26: NNN.NN	Ai 4 input
17	▲ ❄	-15.00 – 115.00 %	27: NNN.NN	Mv 1 check input
18	▲ ❄	-15.00 – 115.00 %	28: NNN.NN	Mv 2 check input
19	▲ ❄	±320.00Unit	29: NNN.NNUnit	Pv 1 input in engineering unit value
20	▲ ❄	±320.00Unit	30: NNN.NNUnit	Pv 2 input in engineering unit value
ANALOG OUTPUT INDICATION				
21	▲	-15.00 – 115.00 %	MV1: NNN.NN	Mv 1 output
22	▲	-15.00 – 115.00 %	MV2: NNN.NN	Mv 2 output
23	▲	-15.00 – 115.00 %	AO1: NNN.NN	Ao 1 output
24	▲	-15.00 – 115.00 %	AO2: NNN.NN	Ao 2 output
ANALOG OUTPUT CONNECTION TERMINAL				
★ 25	▲	GGNN	M1#: 0225	Mv 1 connection terminal (error if not connected) GG: Group No. NN : terminal No.
★ 26	▲	GGNN	M2#: 0225	Mv 2 connection terminal (error if not connected) GG: Group No. NN : terminal No.
★ 27	▲	GGNN	A1#: 0225	Ao 1 connection terminal (error if not connected) GG: Group No. NN : terminal No.
★ 28	▲	GGNN	A2#: 0225	Ao 2 connection terminal (error if not connected) GG: Group No. NN : terminal No.
PV / MV SETTING				
★ 30	▲	-15.00 – 115.00 %	PH1: NNN.NN	Pv 1 high alarm setpoint (for error judgment)
★ 31	▲	-15.00 – 115.00 %	PL1: NNN.NN	Pv 1 low alarm setpoint (for error judgment)
★ 32	▲	-15.00 – 115.00 %	PH2: NNN.NN	Pv 2 high alarm setpoint (for error judgment)
★ 33	▲	-15.00 – 115.00 %	PL2: NNN.NN	Pv 2 low alarm setpoint (for error judgment)
★ 34	▲	0.00 – 115.00 %	ML1: NNN.NN	Mv 1 deviation alarm setpoint (for error judgment)
★ 35	▲	0.00 – 115.00 %	ML2: NNN.NN	Mv 2 deviation alarm setpoint (for error judgment)
★ 36	▲	MM	TP1: MM	Pv 1 input type [MM: input type No.] 0:-10-10 V, 1: -1-1 V, 2: 0-10 V, 3: 1-5 V, 4: 0-1 V, 5: 4-20 mA 6: K, 7: E, 8: J, 9: T, 10: B, 11: R 12: S, 13: C, 14: N, 15: U, 16: L, 17: P, 18: PR 19: Pt100 (JIS '97, IEC), 20: Pt100 (JIS '89), 21: JPt100 (JIS '89), 22: Pt50 (JIS '81), 23: Ni100, 24: MS, 25: DS (Set ITEM37...39 for Pv 1 input type 6...23)
★ 37	▲	-272.0 – 3000.0	HT1: NNNN.N	Pv 1 upper range temperature
★ 38	▲	-272.0 – 3000.0	LT1: NNNN.N	Pv 1 lower range temperature
★ 39	▲	0, 1	CJ1: N	Pv 1 cold junction compensation (0: Without, 1: With)

ITEM	MDFY	DATA INPUT	DISPLAY (e.g.)	CONTENTS
★ 40	▲	MM	TP2: MM	Pv 2 input type [MM: input type No.] 12: S 19: Pt100 (JIS '97, IEC) 0:-10-10 V 6: K 13: C 20: Pt100 (JIS '89) 1: -1-1 V 7: E 14: N 21: JPt100 (JIS '89) 2: 0-10 V 8: J 15: U 22: Pt50 (JIS '81) 3: 1-5 V 9: T 16: L 23: Ni100 4: 0-1 V 10: B 17: P 24: MS 5: 4-20 mA 11: R 18: PR 25: DS (Set ITEM41...43 for Pv 1 input type 6...23)
★ 41	▲	-272.0 – 3000.0	HT2: NNNN.N	Pv 2 upper range temperature
★ 42	▲	-272.0 – 3000.0	LT2: NNNN.N	Pv 2 lower range temperature
★ 43	▲	0, 1	CJ2: N	Pv 2 cold junction compensation (0: without, 1: with)
44	▲ ❄	0, 1	11: N	Pv 1 error contact output
45	▲ ❄	0, 1	12: N	Pv 2 error contact output
46	▲ ❄	0, 1	13: N	Mv 1 error contact output
47	▲ ❄	0, 1	14: N	Mv 2 error contact output
ANALOG I/O ZERO/SPAN ADJUSTMENTS				
★ 50	▲	±115.00 %	PZ1: 0.00	Pv 1 zero adjustment (zero bias)
★ 51	▲	±3.2000	PS1: 1.0000	Pv 1 span adjustment (gain)
★ 52	▲	±115.00 %	PZ2: 0.00	Pv 2 zero adjustment (zero bias)
★ 53	▲	±3.2000	PS2: 1.0000	Pv 2 span adjustment (gain)
★ 54	▲	±115.00 %	MZ1: 0.00	Mv 1 zero adjustment (zero bias)
★ 55	▲	±3.2000	MS1: 1.0000	Mv 1 span adjustment (gain)
★ 56	▲	±115.00 %	MZ2: 0.00	Mv 2 zero adjustment (zero bias)
★ 57	▲	±3.2000	MS2: 1.0000	Mv 2 span adjustment (gain)
★ 58	▲	±115.00 %	IZ1: 0.00	Ai 1 zero adjustment (zero bias)
★ 59	▲	±3.2000	IS1: 1.0000	Ai 1 span adjustment (gain)
★ 60	▲	±115.00 %	IZ2: 0.00	Ai 2 zero adjustment (zero bias)
★ 61	▲	±3.2000	IS2: 1.0000	Ai 2 span adjustment (gain)
★ 62	▲	±115.00 %	IZ3: 0.00	Ai 3 zero adjustment (zero bias)
★ 63	▲	±3.2000	IS3: 1.0000	Ai 3 span adjustment (gain)
★ 64	▲	±115.00 %	IZ4: 0.00	Ai 4 zero adjustment (zero bias)
★ 65	▲	±3.2000	IS4: 1.0000	Ai 4 span adjustment (gain)
★ 66	▲	±115.00 %	CZ1: 0.00	Mv 1 check input zero adjustment (zero bias)
★ 67	▲	±3.2000	CS1: 1.0000	Mv 1 check input span adjustment (gain)
★ 68	▲	±115.00 %	CZ2: 0.00	Mv 2 check input zero adjustment (zero bias)
★ 69	▲	±3.2000	CS2: 1.0000	Mv 2 check input span adjustment (gain)
★ 70	▲	±115.00 %	OZ1: 0.00	Ao 1 zero adjustment (zero bias)
★ 71	▲	±3.2000	OS1: 1.0000	Ao 1 span adjustment (gain)
★ 72	▲	±115.00 %	OZ2: 0.00	Ao 2 zero adjustment (zero bias)
★ 73	▲	±3.2000	OS2: 1.0000	Ao 2 span adjustment (gain)

SC100 Extension Field Terminal 2

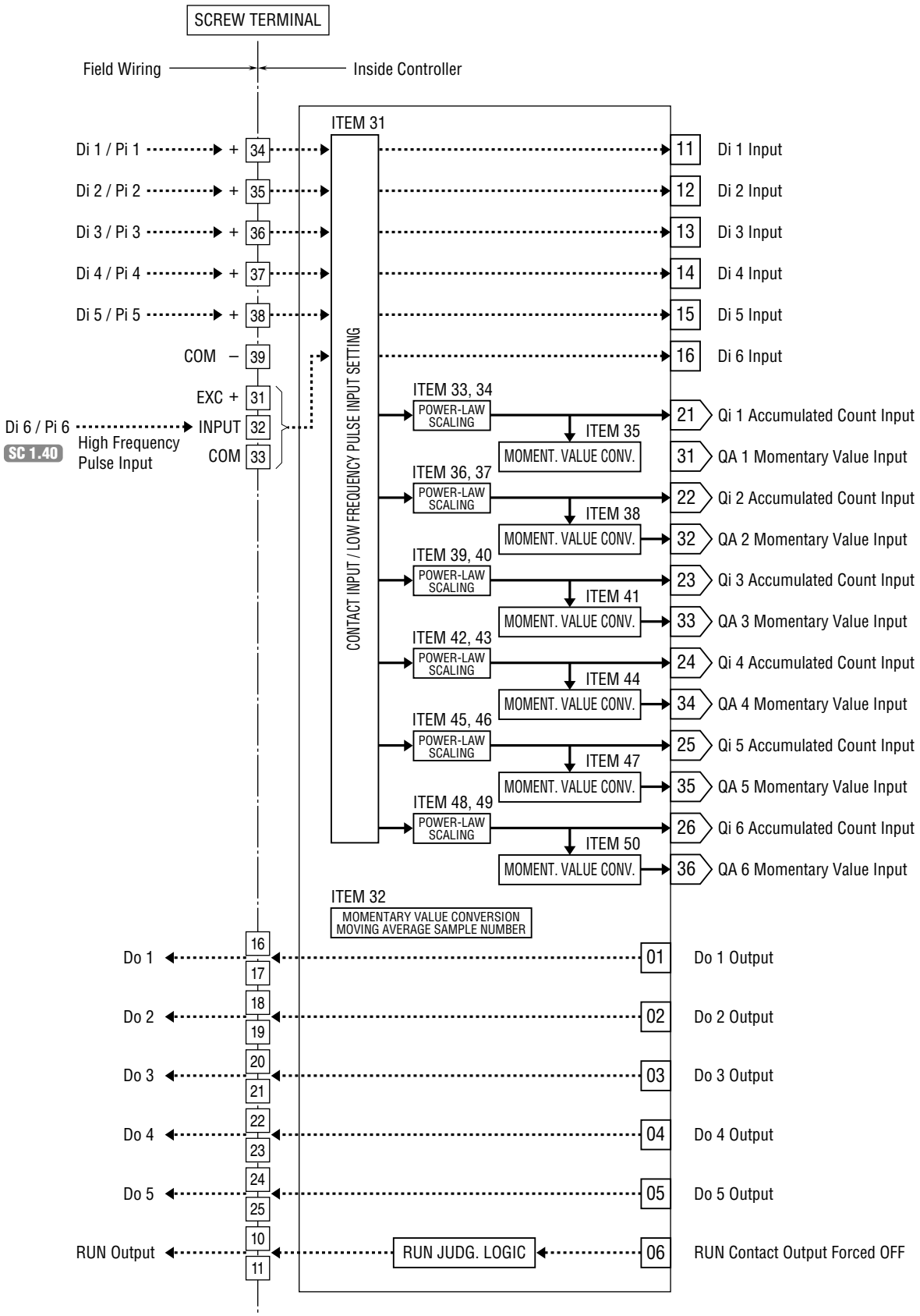

ITEM 02 has no error indication. It is indicated in GROUP 01 (Field Terminal).

GROUP [05] ★: Setting data

ITEM	MDFY	DATA INPUT	DISPLAY (e.g.)	CONTENTS
01	●	(always modifiable)		■ MAINTENANCE SWITCH (lock command) Same mode for Extension Field Terminal 1 and 2
		0	MT: 0	MONITOR mode: data monitoring only
		1	MT: 1	PROGRAM mode: "▲" marked data modifiable
		S	MT: S	SIMULATION mode: "❄" marked data modifiable
10	**IND**	**13**	**MD: 13**	**EXTENSION FIELD TERMINAL 2 (model)**
DISCRETE INPUT INDICATION				
11	▲ ❄	0, 1 or 0 – 9999	11: N or 21: NNNN	Di 1 input indication or Qi 1 accumulated count indication
12	▲ ❄	0, 1 or 0 – 9999	12: N or 22: NNNN	Di 2 input indication or Qi 2 accumulated count indication
13	▲ ❄	0, 1 or 0 – 9999	13: N or 23: NNNN	Di 3 input indication or Qi 3 accumulated count indication
14	▲ ❄	0, 1 or 0 – 9999	14: N or 24: NNNN	Di 4 input indication or Qi 4 accumulated count indication
15	▲ ❄	0, 1 or 0 – 9999	15: N or 25: NNNN	Di 5 input indication or Qi 5 accumulated count indication
16	▲ ❄	0, 1 or 0 – 9999	16: N or 26: NNNN	Di 6 input indication or Qi 6 accumulated count indication
17	▲ ❄	-15.00 – 115.00 %	31: NNN.NN	QA 1 momentary value indication
18	▲ ❄	-15.00 – 115.00 %	32: NNN.NN	QA 2 momentary value indication
19	▲ ❄	-15.00 – 115.00 %	33: NNN.NN	QA 3 momentary value indication
20	▲ ❄	-15.00 – 115.00 %	34: NNN.NN	QA 4 momentary value indication
21	▲ ❄	-15.00 – 115.00 %	35: NNN.NN	QA 5 momentary value indication
22	▲ ❄	-15.00 – 115.00 %	36: NNN.NN	QA 6 momentary value indication
DISCRETE OUTPUT INDICATION				
23	▲ ❄	0, 1	01: N	Do 1 output indication
24	▲ ❄	0, 1	02: N	Do 2 output indication
25	▲ ❄	0, 1	03: N	Do 3 output indication
26	▲ ❄	0, 1	04: N	Do 4 output indication
27	▲ ❄	0, 1	05: N	Do 5 output indication
28	▲ ❄	0, 1	06: N	RUN contact output forced OFF (1: OFF)
PULSE INPUT SETTING				
★ 31	▲		PD: NNNNN	Di/Pi selection (0 = Di, 1 = Pi) (10^0 : Di 1, 10^1 : Di 2, 10^2 : Di 3, 10^3 : Di 4, 10^4 : Di 5) (Remark 1) Di 6 is specified in ITEM 52
★ 32	▲	1-16	KR: NN	Pi moving average sample number for momentary value conversion (QA 1 – QA 5)
★ 33	▲	1, 0, -1, -2, -3	D1: -1	Qi 1 power-law scaling (10's power 1: x 10, 0: x 1, -1: x 0.1, -2: x 0.01, -3: x 0.001)
★ 34	▲	0.0000 – 6.4000	S1: N.NNNN	Qi 1 scaling factor
★ 35	▲	0.00 – 10000.00	K1: NNNNN.NN	QA 1 momentary value conversion factor (number of pulses per second at 100% momentary value input)
★ 36	▲	1, 0, -1, -2, -3	D2: -1	Qi 2 power-law scaling (10's power 1: x 10, 0: x 1, -1: x 0.1, -2: x 0.01, -3: x 0.001)
★ 37	▲	0.0000 – 6.4000	S2: N.NNNN	Qi 2 scaling factor
★ 38	▲	0.00 – 10000.00	K2: NNNNN.NN	QA 2 momentary value conversion factor (number of pulses per second at 100% momentary value input)
★ 39	▲	1, 0, -1, -2, -3	D3: -1	QA 3 power-law scaling (10's power 1: x 10, 0: x 1, -1: x 0.1, -2: x 0.01, -3: x 0.001)
★ 40	▲	0.0000 – 6.4000	S3: N.NNNN	Qi 3 scaling factor
★ 41	▲	0.00 – 10000.00	K3: NNNNN.NN	Qi 3 momentary value conversion factor (number of pulses per second at 100% momentary value input)

ITEM	MDFY	DATA INPUT	DISPLAY (e.g.)	CONTENTS
★ 42	▲	1, 0, -1, -2, -3	D4: -1	Qi 4 power-law scaling (10's power 1: x 10, 0: x 1, -1: x 0.1, -2: x 0.01, -3: x 0.001)
★ 43	▲	0.0000 – 6.4000	S4: N.NNNN	Qi 4 scaling factor
★ 44	▲	0.00 – 10000.00	K4: NNNNN.NN	QA 4 momentary value conversion factor (number of pulses per second at 100% momentary value input)
★ 45	▲	1, 0, -1, -2, -3	D5: -1	Qi 5 power-law scaling (10's power 1: x 10, 0: x 1, -1: x 0.1, -2: x 0.01, -3: x 0.001)
★ 46	▲	0.0000 – 6.4000	S5: N.NNNN	Qi 5 scaling factor
★ 47	▲	0.00 – 10000.00	K5: NNNNN.NN	QA 5 momentary value conversion factor (number of pulses per second at 100% momentary value input)
★ 48	▲	1, 0, -1, -2, -3	D6: -1	Qi 6 power-law scaling (10's power 1: x 10, 0: x 1, -1: x 0.1, -2: x 0.01, -3: x 0.001)
★ 49	▲	0.0000 – 6.4000	S6: N.NNNN	Qi 6 scaling factor
★ 50	▲	0.00 – 10000.00	K6: NNNNN.NN	QA 6 momentary value conversion factor (number of pulses per second at 100% momentary value input)
DISCRETE OUTPUT SETTING				
★ 51	▲	0, 1	DM: N	Abnormality contact output mode (0: Normal, 1: All contact outputs OFF at RUN contact OFF)
HIGH SPEED PULSE INPUT SETTING				
★ 52	▲	0, 1	PD6: N	Di/Pi selection (0: Di 6, 1: Pi 6) SC 1.40

Remark 1: ITEM 31: Di/Pi selection

Pulse outputs become undefined when 'Di' is selected; while discrete outputs become undefined when 'Pi' is selected.

SC200 Field Terminal

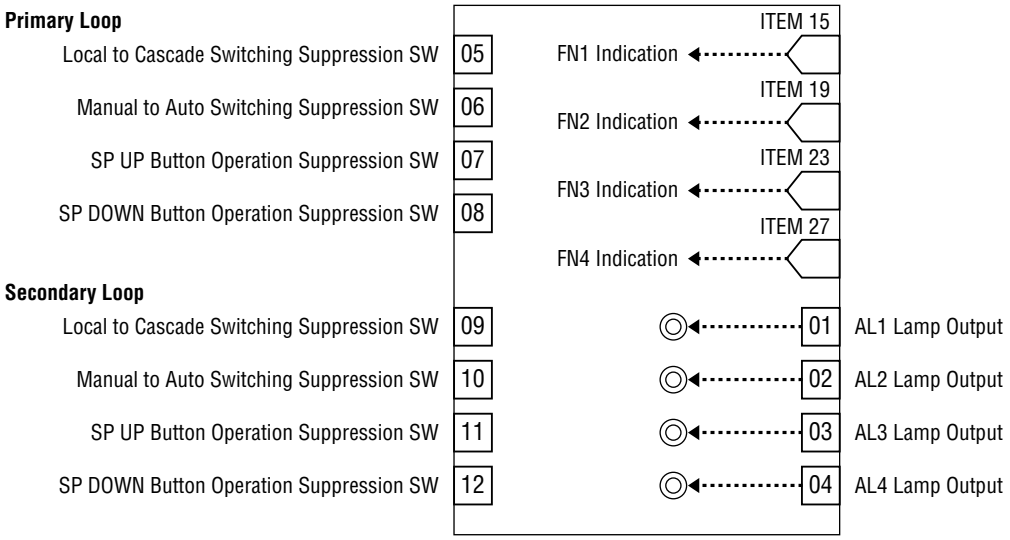

GROUP [01] ★: Setting data

ITEM	MDFY	DATA INPUT	DISPLAY (e.g.)	CONTENTS
01	●	(always modifiable)		■ MAINTENANCE SWITCH (lock command) Same mode for Extension Field Terminal 1 and 2
		0	MT: 0	MONITOR mode: data monitoring only
		1	MT: 1	PROGRAM mode: "▲" marked data modifiable
		S	MT: S	SIMULATION mode: "❄" marked data modifiable
02	IND	No input	ER: NN	Error indication (00: normal, 01 – 90: error) Extension Field Terminal 1 and 2 included
10	**IND**	**11**	**MD: 11**	**FIELD TERMINAL (model)**
INDICATION				
★ 11	▲	2, 3	GR: 2	Primary loop Group No. (valid after reset)
★ 12	▲	0, 1	M1: N	Primary MV operational range (0: ±115%, 1: -15 – +115%)
★ 13	▲	0, 1	M2: N	Secondary MV operational range (0: ±115%, 1: -15 – +115%)
★ 15	▲	GGNN	1F: 3121	FN1 connection terminal for indication GG: Group No. NN: terminal No.
★ 16	▲	±32000	1H: 15000	FN1 upper range (in engineering unit)
★ 17	▲	±32000	1L: 0	FN1 lower range (in engineering unit)
★ 18	▲	0, 1, 2, 3, 4, 5	1D: 1	FN1 decimal point position (from rightmost digit)
★ 19	▲	GGNN	2F: GGNN	FN2 connection terminal for indication GG: Group No. NN: terminal No.
★ 20	▲	±32000	2H: NNNNN	FN2 upper range (in engineering unit)
★ 21	▲	±32000	2L: NNNNN	FN2 lower range (in engineering unit)
★ 22	▲	0, 1, 2, 3, 4, 5	2D: N	FN2 decimal point position (from rightmost digit)
★ 23	▲	GGNN	3F: GGNN	FN3 connection terminal for indication GG: Group No. NN: terminal No.
★ 24	▲	±32000	3H: NNNNN	FN3 upper range (in engineering unit)
★ 25	▲	±32000	3L: NNNNN	FN3 lower range (in engineering unit)
★ 26	▲	0, 1, 2, 3, 4, 5	3D: N	FN3 decimal point position (from rightmost digit)
★ 27	▲	GGNN	4F: GGNN	FN4 connection terminal for indication GG: Group No. NN: terminal No.
★ 28	▲	±32000	4H: NNNNN	FN4 upper range (in engineering unit)
★ 29	▲	±32000	4L: NNNNN	FN4 lower range (in engineering unit)
★ 30	▲	0, 1, 2, 3, 4, 5	4D: N	FN4 decimal point position (from rightmost digit)

ITEM	MDFY	DATA INPUT	DISPLAY (e.g.)	CONTENTS
★ 31	▲	alphanumeric	T1: XXX...X	FN1 tag name (max. 10 characters)
★ 32	▲	alphanumeric	T2: XXX...X	FN2 tag name (max. 10 characters)
★ 33	▲	alphanumeric	T3: XXX...X	FN3 tag name (max. 10 characters)
★ 34	▲	alphanumeric	T4: XXX...X	FN4 tag name (max. 10 characters)
★ 35	▲	alphanumeric	U1: XXX...X	FN1 engineering unit (max. 8 characters)
★ 36	▲	alphanumeric	U2: XXX...X	FN2 engineering unit (max. 8 characters)
★ 37	▲	alphanumeric	U3: XXX...X	FN3 engineering unit (max. 8 characters)
★ 38	▲	alphanumeric	U4: XXX...X	FN4 engineering unit (max. 8 characters)
39	▲ ❄	0, 1	01: N	AL1 lamp output
40	▲ ❄	0, 1	02: N	AL2 lamp output
41	▲ ❄	0, 1	03: N	AL3 lamp output
42	▲ ❄	0, 1	04: N	AL4 lamp output
★ 43	▲	alphanumeric	L1: XXXX	AL1 comment (max. 4 characters)
★ 44	▲	alphanumeric	L2: XXXX	AL2 comment (max. 4 characters)
★ 45	▲	alphanumeric	L3: XXXX	AL3 comment (max. 4 characters)
★ 46	▲	alphanumeric	L4: XXXX	AL4 comment (max. 4 characters)
CONTROL (Remark 1)				
Primary Loop				
51	▲ ❄	0, 1	05: N	Local to Cascade switching suppress. SW (0: permit, 1: prohibit)
52	▲ ❄	0, 1	06: N	Manual to Auto switching suppress. SW (0: permit, 1: prohibit)
53	▲ ❄	0, 1	07: N	SP UP button operation suppress. SW (0: permit, 1: prohibit)
54	▲ ❄	0, 1	08: N	SP DOWN button operation suppress. SW (0: permit, 1: prohibit)
Secondary Loop				
55	▲ ❄	0, 1	09: N	Local to Cascade switching suppress. SW (0: permit, 1: prohibit)
56	▲ ❄	0, 1	10: N	Manual to Auto switching suppress. SW (0: permit, 1: prohibit)
57	▲ ❄	0, 1	11: N	SP UP button operation suppress. SW (0: permit, 1: prohibit)
58	▲ ❄	0, 1	12: N	SP DOWN button operation suppress. SW (0: permit, 1: prohibit)
Common Items				
61	▲	0, 1	21: 0	SP UP button operation status (0: OFF, 1: ON) SC 1.70
62	▲	0, 1	22: 0	SP DOWN button operation status (0: OFF, 1: ON) SC 1.70
63	▲	0, 1	23: 0	MV UP button operation status (0: OFF, 1: ON) SC 1.70
64	▲	0, 1	24: 0	MV DOWN button operation status (0: OFF, 1: ON) SC 1.70
★ 71	▲	10 – 100 s/100%	ST: 40	Time of holding SP UP or DOWN button SC 1.70
★ 72	▲	10 – 100 s/100%	ST: 40	Time of holding MV UP or DOWN button SC 1.70

Remark 1: Control by a host device connected via Modbus prevails the local setting.
Remark 2: ITEM 61 – 64: Please perform button operations with two times more than computation cycle.
Remark 3: ITEM 61 – 64: Obtains button operation status regardless of screen functions such as A/M and C/L.

SC200 Extension Field Terminal 1

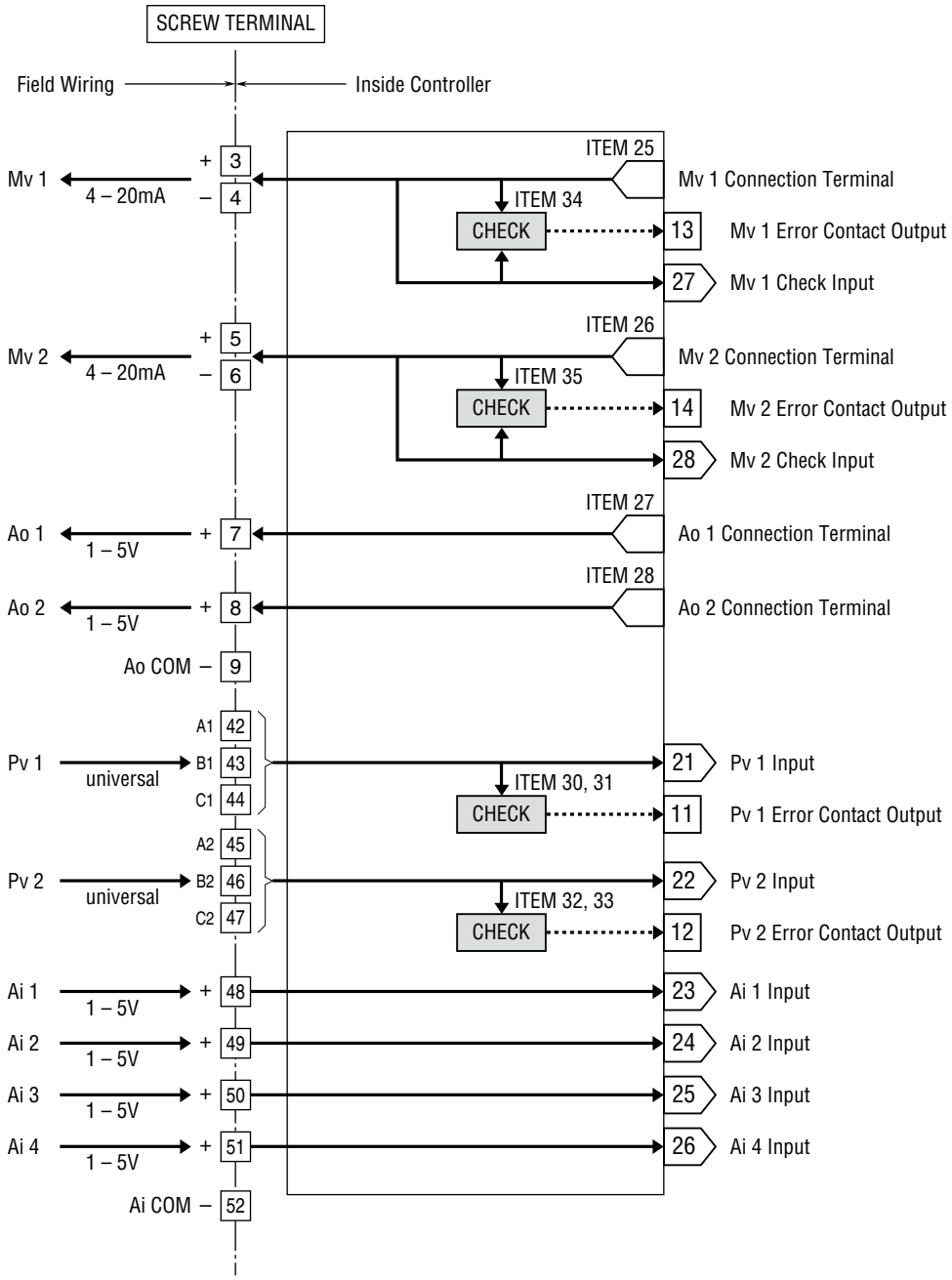

ITEM 02 has no error indication. It is indicated in GROUP 01 (Field Terminal).

GROUP [04] ★: Setting data

ITEM	MDFY	DATA INPUT	DISPLAY (e.g.)	CONTENTS
01	●	(always modifiable)		■ MAINTENANCE SWITCH (lock command) Same mode for Extension Field Terminal 1 and 2
		0	MT: 0	MONITOR mode: data monitoring only
		1	MT: 1	PROGRAM mode: "▲" marked data modifiable
		S	MT: S	SIMULATION mode: "❄" marked data modifiable
10	**IND**	**12**	**MD: 12**	**EXTENSION FIELD TERMINAL 1 (model)**
ANALOG INPUT INDICATION				
11	▲ ❄	-15.00 – 115.00 %	21: NNN.NN	Pv 1 input
12	▲ ❄	-15.00 – 115.00 %	22: NNN.NN	Pv 2 input
13	▲ ❄	-15.00 – 115.00 %	23: NNN.NN	Ai 1 input
14	▲ ❄	-15.00 – 115.00 %	24: NNN.NN	Ai 2 input
15	▲ ❄	-15.00 – 115.00 %	25: NNN.NN	Ai 3 input
16	▲ ❄	-15.00 – 115.00 %	26: NNN.NN	Ai 4 input
17	▲ ❄	-15.00 – 115.00 %	27: NNN.NN	Mv 1 check input
18	▲ ❄	-15.00 – 115.00 %	28: NNN.NN	Mv 2 check input
19	▲ ❄	±320.00Unit	29: NNN.NNUnit	Pv 1 input in engineering unit value
20	▲ ❄	±320.00Unit	30: NNN.NNUnit	Pv 2 input in engineering unit value
ANALOG OUTPUT INDICATION				
21	▲	-15.00 – 115.00 %	MV1: NNN.NN	Mv 1 output
22	▲	-15.00 – 115.00 %	MV2: NNN.NN	Mv 2 output
23	▲	-15.00 – 115.00 %	AO1: NNN.NN	Ao 1 output
24	▲	-15.00 – 115.00 %	AO2: NNN.NN	Ao 2 output
ANALOG OUTPUT CONNECTION TERMINAL				
★ 25	▲	GGNN	M1#: 0225	Mv 1 connection terminal (error if not connected) GG: Group No. NN : terminal No.
★ 26	▲	GGNN	M2#: 0225	Mv 2 connection terminal (error if not connected) GG: Group No. NN : terminal No.
★ 27	▲	GGNN	A1#: 0225	Ao 1 connection terminal (error if not connected) GG: Group No. NN : terminal No.
★ 28	▲	GGNN	A2#: 0225	Ao 2 connection terminal (error if not connected) GG: Group No. NN : terminal No.
PV / MV SETTING				
★ 30	▲	-15.00 – 115.00 %	PH1: NNN.NN	Pv 1 high alarm setpoint (for error judgment)
★ 31	▲	-15.00 – 115.00 %	PL1: NNN.NN	Pv 1 low alarm setpoint (for error judgment)
★ 32	▲	-15.00 – 115.00 %	PH2: NNN.NN	Pv 2 high alarm setpoint (for error judgment)
★ 33	▲	-15.00 – 115.00 %	PL2: NNN.NN	Pv 2 low alarm setpoint (for error judgment)
★ 34	▲	0.00 – 115.00 %	ML1: NNN.NN	Mv 1 deviation alarm setpoint (for error judgment)
★ 35	▲	0.00 – 115.00 %	ML2: NNN.NN	Mv 2 deviation alarm setpoint (for error judgment)
★ 36	▲	MM	TP1: MM	Pv 1 input type [MM: input type No.] 0:-10-10 V, 1: -1-1 V, 2: 0-10 V, 3: 1-5 V, 4: 0-1 V, 5: 4-20 mA 6: K, 7: E, 8: J, 9: T, 10: B, 11: R 12: S, 13: C, 14: N, 15: U, 16: L, 17: P, 18: PR 19: Pt100 (JIS '97, IEC), 20: Pt100 (JIS '89), 21: JPt100 (JIS '89), 22: Pt50 (JIS '81), 23: Ni100, 24: MS, 25: DS (Set ITEM37...39 for Pv 1 input type 6...23)
★ 37	▲	-272.0 – 3000.0	HT1: NNNN.N	Pv 1 upper range temperature
★ 38	▲	-272.0 – 3000.0	LT1: NNNN.N	Pv 1 lower range temperature
★ 39	▲	0, 1	CJ1: N	Pv 1 cold junction compensation (0: Without, 1: With)

ITEM	MDFY	DATA INPUT	DISPLAY (e.g.)	CONTENTS
★ 40	▲	MM	TP2: MM	Pv 2 input type [MM: input type No.] 12: S 19: Pt100 (JIS '97, IEC) 0:-10-10 V 6: K 13: C 20: Pt100 (JIS '89) 1: -1-1 V 7: E 14: N 21: JPt100 (JIS '89) 2: 0-10 V 8: J 15: U 22: Pt50 (JIS '81) 3: 1-5 V 9: T 16: L 23: Ni100 4: 0-1 V 10: B 17: P 24: MS 5: 4-20 mA 11: R 18: PR 25: DS (Set ITEM41...43 for Pv 1 input type 6...23)
★ 41	▲	-272.0 – 3000.0	HT2: NNNN.N	Pv 2 upper range temperature
★ 42	▲	-272.0 – 3000.0	LT2: NNNN.N	Pv 2 lower range temperature
★ 43	▲	0, 1	CJ2: N	Pv 2 cold junction compensation (0: without, 1: with)
44	▲ ❄	0, 1	11: N	Pv 1 error contact output
45	▲ ❄	0, 1	12: N	Pv 2 error contact output
46	▲ ❄	0, 1	13: N	Mv 1 error contact output
47	▲ ❄	0, 1	14: N	Mv 2 error contact output
ANALOG I/O ZERO/SPAN ADJUSTMENTS				
★ 50	▲	±115.00 %	PZ1: 0.00	Pv 1 zero adjustment (zero bias)
★ 51	▲	±3.2000	PS1: 1.0000	Pv 1 span adjustment (gain)
★ 52	▲	±115.00 %	PZ2: 0.00	Pv 2 zero adjustment (zero bias)
★ 53	▲	±3.2000	PS2: 1.0000	Pv 2 span adjustment (gain)
★ 54	▲	±115.00 %	MZ1: 0.00	Mv 1 zero adjustment (zero bias)
★ 55	▲	±3.2000	MS1: 1.0000	Mv 1 span adjustment (gain)
★ 56	▲	±115.00 %	MZ2: 0.00	Mv 2 zero adjustment (zero bias)
★ 57	▲	±3.2000	MS2: 1.0000	Mv 2 span adjustment (gain)
★ 58	▲	±115.00 %	IZ1: 0.00	Ai 1 zero adjustment (zero bias)
★ 59	▲	±3.2000	IS1: 1.0000	Ai 1 span adjustment (gain)
★ 60	▲	±115.00 %	IZ2: 0.00	Ai 2 zero adjustment (zero bias)
★ 61	▲	±3.2000	IS2: 1.0000	Ai 2 span adjustment (gain)
★ 62	▲	±115.00 %	IZ3: 0.00	Ai 3 zero adjustment (zero bias)
★ 63	▲	±3.2000	IS3: 1.0000	Ai 3 span adjustment (gain)
★ 64	▲	±115.00 %	IZ4: 0.00	Ai 4 zero adjustment (zero bias)
★ 65	▲	±3.2000	IS4: 1.0000	Ai 4 span adjustment (gain)
★ 66	▲	±115.00 %	CZ1: 0.00	Mv 1 check input zero adjustment (zero bias)
★ 67	▲	±3.2000	CS1: 1.0000	Mv 1 check input span adjustment (gain)
★ 68	▲	±115.00 %	CZ2: 0.00	Mv 2 check input zero adjustment (zero bias)
★ 69	▲	±3.2000	CS2: 1.0000	Mv 2 check input span adjustment (gain)
★ 70	▲	±115.00 %	OZ1: 0.00	Ao 1 zero adjustment (zero bias)
★ 71	▲	±3.2000	OS1: 1.0000	Ao 1 span adjustment (gain)
★ 72	▲	±115.00 %	OZ2: 0.00	Ao 2 zero adjustment (zero bias)
★ 73	▲	±3.2000	OS2: 1.0000	Ao 2 span adjustment (gain)

SC200 Extension Field Terminal 2

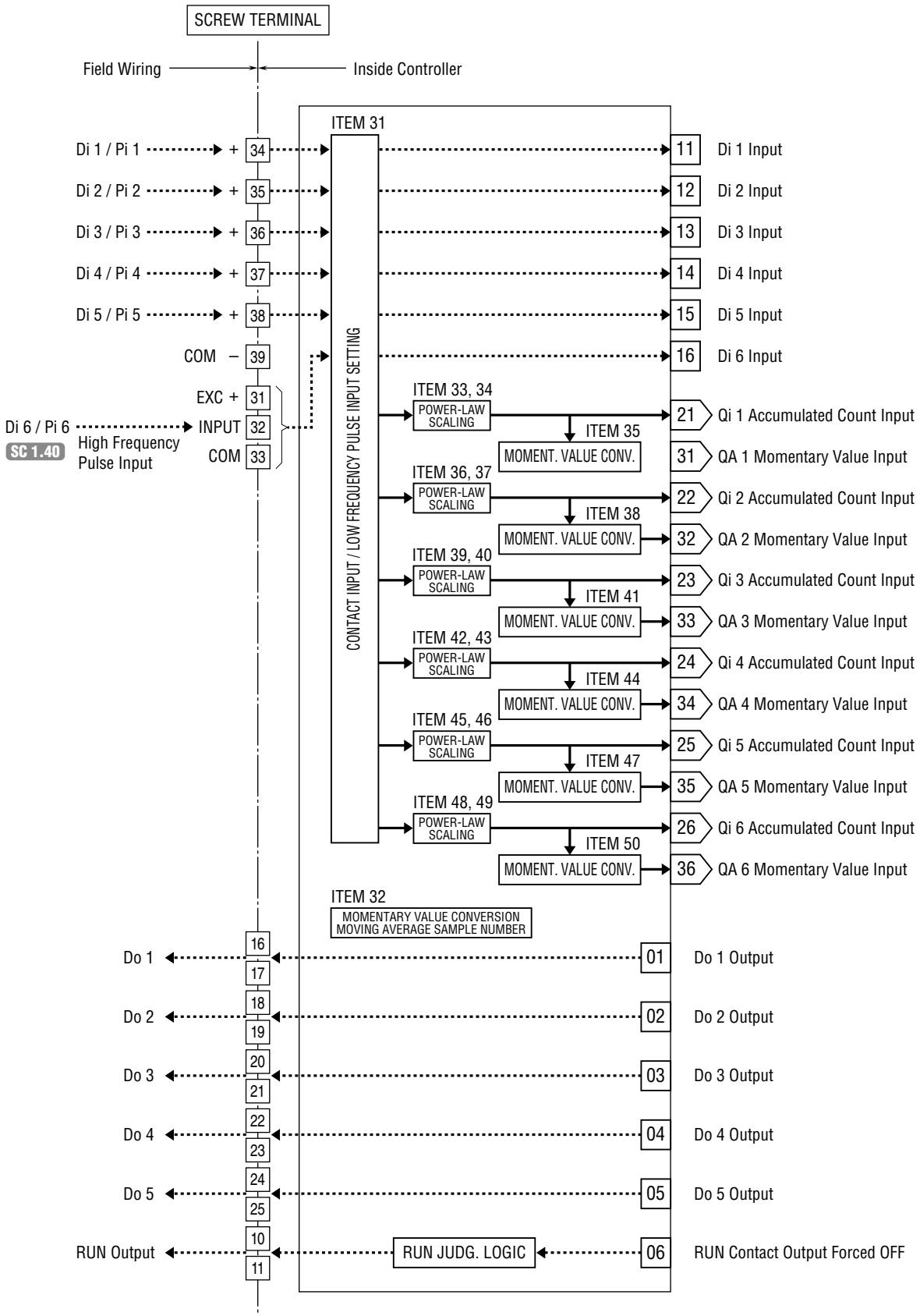

ITEM 02 has no error indication. It is indicated in GROUP 01 (Field Terminal).

GROUP [05] ★: Setting data

ITEM	MDFY	DATA INPUT	DISPLAY (e.g.)	CONTENTS
01	●	(always modifiable)		■ MAINTENANCE SWITCH (lock command) Same mode for Extension Field Terminal 1 and 2
		0	MT: 0	MONITOR mode: data monitoring only
		1	MT: 1	PROGRAM mode: "▲" marked data modifiable
		S	MT: S	SIMULATION mode: "❄" marked data modifiable
10	**IND**	**13**	**MD: 13**	**EXTENSION FIELD TERMINAL 2 (model)**
DISCRETE INPUT INDICATION				
11	▲ ❄	0, 1 or 0 – 9999	11: N or 21: NNNN	Di 1 input indication or Qi 1 accumulated count indication
12	▲ ❄	0, 1 or 0 – 9999	12: N or 22: NNNN	Di 2 input indication or Qi 2 accumulated count indication
13	▲ ❄	0, 1 or 0 – 9999	13: N or 23: NNNN	Di 3 input indication or Qi 3 accumulated count indication
14	▲ ❄	0, 1 or 0 – 9999	14: N or 24: NNNN	Di 4 input indication or Qi 4 accumulated count indication
15	▲ ❄	0, 1 or 0 – 9999	15: N or 25: NNNN	Di 5 input indication or Qi 5 accumulated count indication
16	▲ ❄	0, 1 or 0 – 9999	16: N or 26: NNNN	Di 6 input indication or Qi 6 accumulated count indication
17	▲ ❄	-15.00 – 115.00 %	31: NNN.NN	QA 1 momentary value indication
18	▲ ❄	-15.00 – 115.00 %	32: NNN.NN	QA 2 momentary value indication
19	▲ ❄	-15.00 – 115.00 %	33: NNN.NN	QA 3 momentary value indication
20	▲ ❄	-15.00 – 115.00 %	34: NNN.NN	QA 4 momentary value indication
21	▲ ❄	-15.00 – 115.00 %	35: NNN.NN	QA 5 momentary value indication
22	▲ ❄	-15.00 – 115.00 %	36: NNN.NN	QA 6 momentary value indication
DISCRETE OUTPUT INDICATION				
23	▲ ❄	0, 1	01: N	Do 1 output indication
24	▲ ❄	0, 1	02: N	Do 2 output indication
25	▲ ❄	0, 1	03: N	Do 3 output indication
26	▲ ❄	0, 1	04: N	Do 4 output indication
27	▲ ❄	0, 1	05: N	Do 5 output indication
28	▲ ❄	0, 1	06: N	RUN contact output forced OFF (1: OFF)
PULSE INPUT SETTING				
★ 31	▲		PD: NNNNN	Di/Pi selection (0 = Di, 1 = Pi) (10^0 : Di 1, 10^1 : Di 2, 10^2 : Di 3, 10^3 : Di 4, 10^4 : Di 5) (Remark 1) Di 6 is specified in ITEM 52
★ 32	▲	1-16	KR: NN	Pi moving average sample number for momentary value conversion (QA 1 – QA 5)
★ 33	▲	1, 0, -1, -2, -3	D1: -1	Qi 1 power-law scaling (10's power 1: x 10, 0: x 1, -1: x 0.1, -2: x 0.01, -3: x 0.001)
★ 34	▲	0.0000 – 6.4000	S1: N.NNNN	Qi 1 scaling factor
★ 35	▲	0.00 – 10000.00	K1: NNNNN.NN	QA 1 momentary value conversion factor (number of pulses per second at 100% momentary value input)
★ 36	▲	1, 0, -1, -2, -3	D2: -1	Qi 2 power-law scaling (10's power 1: x 10, 0: x 1, -1: x 0.1, -2: x 0.01, -3: x 0.001)
★ 37	▲	0.0000 – 6.4000	S2: N.NNNN	Qi 2 scaling factor
★ 38	▲	0.00 – 10000.00	K2: NNNNN.NN	QA 2 momentary value conversion factor (number of pulses per second at 100% momentary value input)
★ 39	▲	1, 0, -1, -2, -3	D3: -1	Qi 3 power-law scaling (10's power 1: x 10, 0: x 1, -1: x 0.1, -2: x 0.01, -3: x 0.001)
★ 40	▲	0.0000 – 6.4000	S3: N.NNNN	Qi 3 scaling factor
★ 41	▲	0.00 – 10000.00	K3: NNNNN.NN	QA 3 momentary value conversion factor (number of pulses per second at 100% momentary value input)

ITEM	MDFY	DATA INPUT	DISPLAY (e.g.)	CONTENTS
★ 42	▲	1, 0, -1, -2, -3	D4: -1	Qi 4 power-law scaling (10's power 1: x 10, 0: x 1, -1: x 0.1, -2: x 0.01, -3: x 0.001)
★ 43	▲	0.0000 – 6.4000	S4: N.NNNN	Qi 4 scaling factor
★ 44	▲	0.00 – 10000.00	K4: NNNNN.NN	QA 4 momentary value conversion factor (number of pulses per second at 100% momentary value input)
★ 45	▲	1, 0, -1, -2, -3	D5: -1	Qi 5 power-law scaling (10's power 1: x 10, 0: x 1, -1: x 0.1, -2: x 0.01, -3: x 0.001)
★ 46	▲	0.0000 – 6.4000	S5: N.NNNN	Qi 5 scaling factor
★ 47	▲	0.00 – 10000.00	K5: NNNNN.NN	QA 5 momentary value conversion factor (number of pulses per second at 100% momentary value input)
★ 48	▲	1, 0, -1, -2, -3	D6: -1	Qi 6 power-law scaling (10's power 1: x 10, 0: x 1, -1: x 0.1, -2: x 0.01, -3: x 0.001)
★ 49	▲	0.0000 – 6.4000	S6: N.NNNN	Qi 6 scaling factor
★ 50	▲	0.00 – 10000.00	K6: NNNNN.NN	QA 6 momentary value conversion factor (number of pulses per second at 100% momentary value input)
DISCRETE OUTPUT SETTING				
★ 51	▲	0, 1	DM: N	Abnormality contact output mode (0: Normal, 1: All contact outputs OFF at RUN contact OFF)
HIGH SPEED PULSE INPUT SETTING				
★ 52	▲	0, 1	PD6: N	Di/Pi selection (0: Di 6, 1: Pi 6) SC 1.40

Remark 1: ITEM 31: Di/Pi selection

Pulse outputs become undefined when 'Di' is selected; while discrete outputs become undefined when 'Pi' is selected.

SC200W Field Terminal

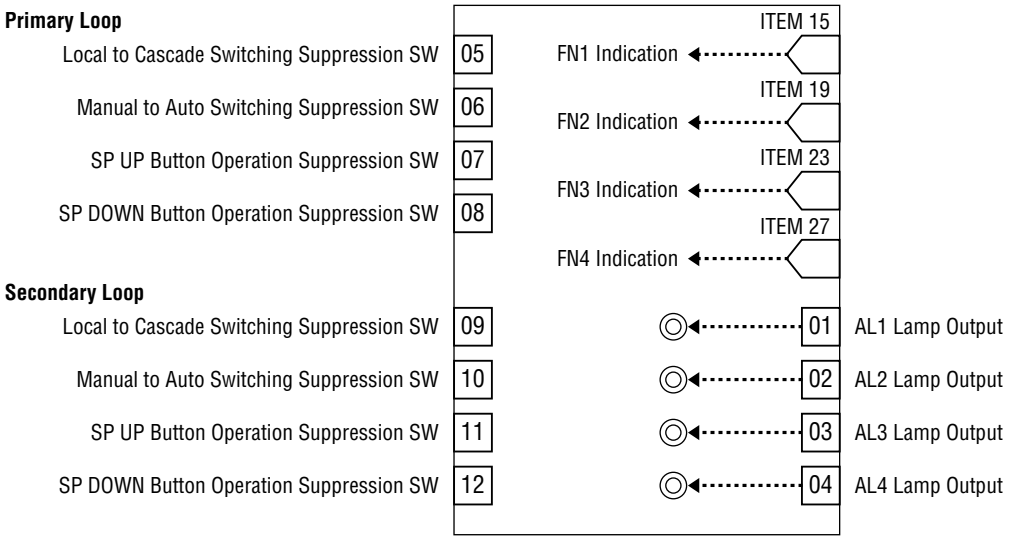

GROUP [01] ★: Setting data

ITEM	MDFY	DATA INPUT	DISPLAY (e.g.)	CONTENTS
01	●	(always modifiable)		■ MAINTENANCE SWITCH (lock command) Same mode for Extension Field Terminal 1 and 2
		0	MT: 0	MONITOR mode: data monitoring only
		1	MT: 1	PROGRAM mode: "▲" marked data modifiable
		S	MT: S	SIMULATION mode: "❄" marked data modifiable
02	IND	No input	ER: NN	Error indication (00: normal, 01 – 90: error) Extension Field Terminal 1 and 2 included
10	**IND**	**11**	**MD: 11**	**FIELD TERMINAL (model)**
INDICATION				
★ 11	▲	2, 3	GR: 2	Primary loop Group No. (valid after reset)
★ 12	▲	0, 1	M1: N	Primary MV operational range (0: ±115%, 1: -15 – +115%)
★ 13	▲	0, 1	M2: N	Secondary MV operational range (0: ±115%, 1: -15 – +115%)
★ 15	▲	GGNN	1F: 3121	FN1 connection terminal for indication GG: Group No. NN: terminal No.
★ 16	▲	±32000	1H: 15000	FN1 upper range (in engineering unit)
★ 17	▲	±32000	1L: 0	FN1 lower range (in engineering unit)
★ 18	▲	0, 1, 2, 3, 4, 5	1D: 1	FN1 decimal point position (from rightmost digit)
★ 19	▲	GGNN	2F: GGNN	FN2 connection terminal for indication GG: Group No. NN: terminal No.
★ 20	▲	±32000	2H: NNNNN	FN2 upper range (in engineering unit)
★ 21	▲	±32000	2L: NNNNN	FN2 lower range (in engineering unit)
★ 22	▲	0, 1, 2, 3, 4, 5	2D: N	FN2 decimal point position (from rightmost digit)
★ 23	▲	GGNN	3F: GGNN	FN3 connection terminal for indication GG: Group No. NN: terminal No.
★ 24	▲	±32000	3H: NNNNN	FN3 upper range (in engineering unit)
★ 25	▲	±32000	3L: NNNNN	FN3 lower range (in engineering unit)
★ 26	▲	0, 1, 2, 3, 4, 5	3D: N	FN3 decimal point position (from rightmost digit)
★ 27	▲	GGNN	4F: GGNN	FN4 connection terminal for indication GG: Group No. NN: terminal No.
★ 28	▲	±32000	4H: NNNNN	FN4 upper range (in engineering unit)
★ 29	▲	±32000	4L: NNNNN	FN4 lower range (in engineering unit)
★ 30	▲	0, 1, 2, 3, 4, 5	4D: N	FN4 decimal point position (from rightmost digit)

ITEM	MDFY	DATA INPUT	DISPLAY (e.g.)	CONTENTS
★ 31	▲	alphanumeric	T1: XXX...X	FN1 tag name (max. 10 characters)
★ 32	▲	alphanumeric	T2: XXX...X	FN2 tag name (max. 10 characters)
★ 33	▲	alphanumeric	T3: XXX...X	FN3 tag name (max. 10 characters)
★ 34	▲	alphanumeric	T4: XXX...X	FN4 tag name (max. 10 characters)
★ 35	▲	alphanumeric	U1: XXX...X	FN1 engineering unit (max. 8 characters)
★ 36	▲	alphanumeric	U2: XXX...X	FN2 engineering unit (max. 8 characters)
★ 37	▲	alphanumeric	U3: XXX...X	FN3 engineering unit (max. 8 characters)
★ 38	▲	alphanumeric	U4: XXX...X	FN4 engineering unit (max. 8 characters)
39	▲ ❄	0, 1	01: N	AL1 lamp output
40	▲ ❄	0, 1	02: N	AL2 lamp output
41	▲ ❄	0, 1	03: N	AL3 lamp output
42	▲ ❄	0, 1	04: N	AL4 lamp output
★ 43	▲	alphanumeric	L1: XXXX	AL1 comment (max. 4 characters)
★ 44	▲	alphanumeric	L2: XXXX	AL2 comment (max. 4 characters)
★ 45	▲	alphanumeric	L3: XXXX	AL3 comment (max. 4 characters)
★ 46	▲	alphanumeric	L4: XXXX	AL4 comment (max. 4 characters)
CONTROL (Remark 1)				
Primary Loop				
51	▲ ❄	0, 1	05: N	Local to Cascade switching suppress. SW (0: permit, 1: prohibit)
52	▲ ❄	0, 1	06: N	Manual to Auto switching suppress. SW (0: permit, 1: prohibit)
53	▲ ❄	0, 1	07: N	SP UP button operation suppress. SW (0: permit, 1: prohibit)
54	▲ ❄	0, 1	08: N	SP DOWN button operation suppress. SW (0: permit, 1: prohibit)
Secondary Loop				
55	▲ ❄	0, 1	09: N	Local to Cascade switching suppress. SW (0: permit, 1: prohibit)
56	▲ ❄	0, 1	10: N	Manual to Auto switching suppress. SW (0: permit, 1: prohibit)
57	▲ ❄	0, 1	11: N	SP UP button operation suppress. SW (0: permit, 1: prohibit)
58	▲ ❄	0, 1	12: N	SP DOWN button operation suppress. SW (0: permit, 1: prohibit)
Common Items				
61	▲	0, 1	21: 0	SP UP button operation status (0: OFF, 1: ON)
62	▲	0, 1	22: 0	SP DOWN button operation status (0: OFF, 1: ON)
63	▲	0, 1	23: 0	MV UP button operation status (0: OFF, 1: ON)
64	▲	0, 1	24: 0	MV DOWN button operation status (0: OFF, 1: ON)
★ 71	▲	10 – 100 s/100%	ST: 40	Time of holding SP UP or DOWN button
★ 72	▲	10 – 100 s/100%	ST: 40	Time of holding MV UP or DOWN button

Remark 1: Control by a host device connected via Modbus prevails the local setting.
Remark 2: ITEM 61 – 64: Please perform button operations with two times more than computation cycle.
Remark 3: ITEM 61 – 64: Obtains button operation status regardless of screen functions such as A/M and C/L.

SC200W Extension Field Terminal 1

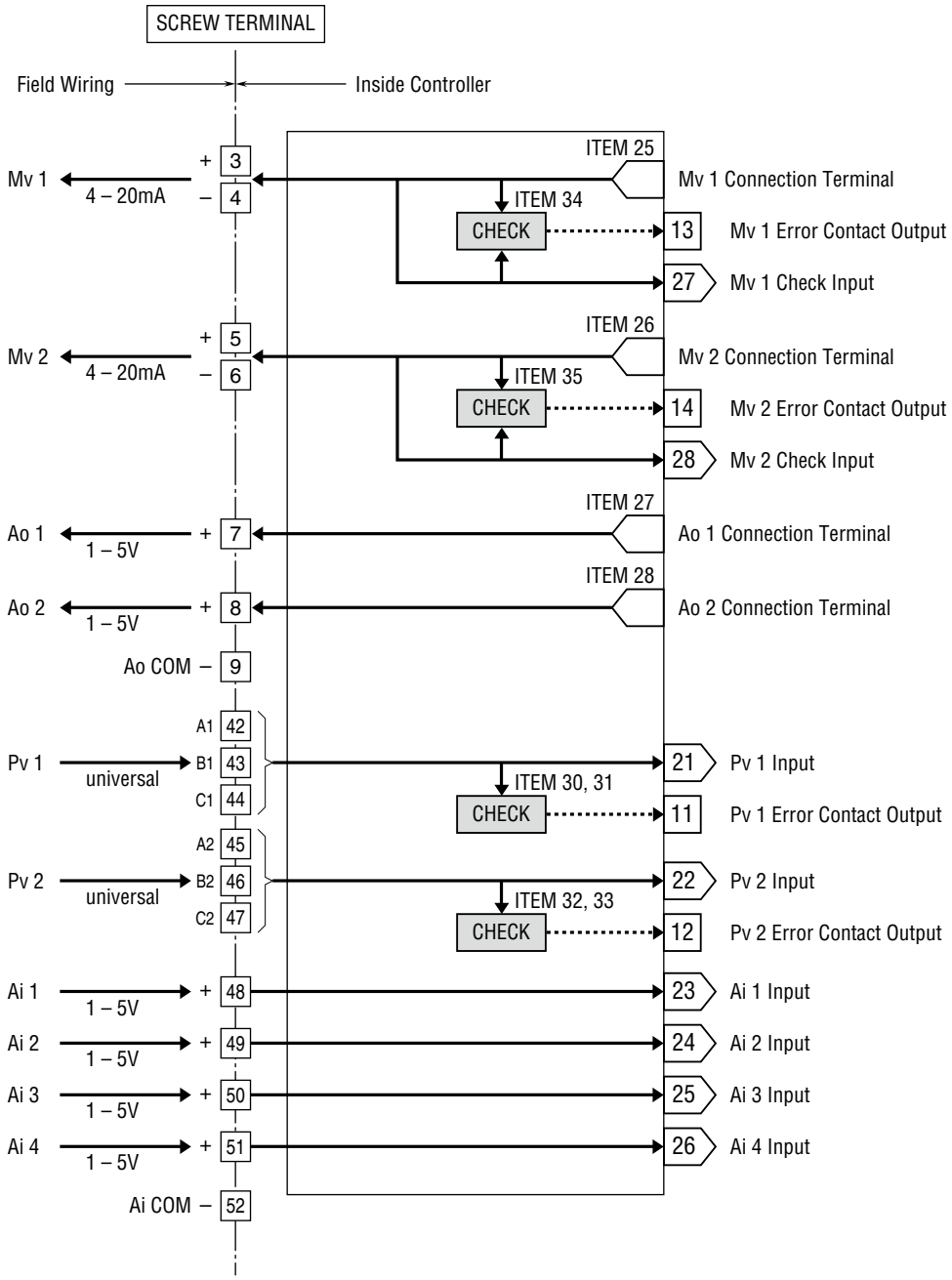

ITEM 02 has no error indication. It is indicated in GROUP 01 (Field Terminal).

GROUP [04] ★: Setting data

ITEM	MDFY	DATA INPUT	DISPLAY (e.g.)	CONTENTS
01	●	(always modifiable)		■ MAINTENANCE SWITCH (lock command) Same mode for Extension Field Terminal 1 and 2
		0	MT: 0	MONITOR mode: data monitoring only
		1	MT: 1	PROGRAM mode: "▲" marked data modifiable
		S	MT: S	SIMULATION mode: "❄" marked data modifiable
10	**IND**	**12**	**MD: 12**	**EXTENSION FIELD TERMINAL 1 (model)**
ANALOG INPUT INDICATION				
11	▲ ❄	-15.00 – 115.00 %	21: NNN.NN	Pv 1 input
12	▲ ❄	-15.00 – 115.00 %	22: NNN.NN	Pv 2 input
13	▲ ❄	-15.00 – 115.00 %	23: NNN.NN	Ai 1 input
14	▲ ❄	-15.00 – 115.00 %	24: NNN.NN	Ai 2 input
15	▲ ❄	-15.00 – 115.00 %	25: NNN.NN	Ai 3 input
16	▲ ❄	-15.00 – 115.00 %	26: NNN.NN	Ai 4 input
17	▲ ❄	-15.00 – 115.00 %	27: NNN.NN	Mv 1 check input
18	▲ ❄	-15.00 – 115.00 %	28: NNN.NN	Mv 2 check input
19	▲ ❄	±320.00Unit	29: NNN.NNUnit	Pv 1 input in engineering unit value
20	▲ ❄	±320.00Unit	30: NNN.NNUnit	Pv 2 input in engineering unit value
ANALOG OUTPUT INDICATION				
21	▲	-15.00 – 115.00 %	MV1: NNN.NN	Mv 1 output
22	▲	-15.00 – 115.00 %	MV2: NNN.NN	Mv 2 output
23	▲	-15.00 – 115.00 %	AO1: NNN.NN	Ao 1 output
24	▲	-15.00 – 115.00 %	AO2: NNN.NN	Ao 2 output
ANALOG OUTPUT CONNECTION TERMINAL				
★ 25	▲	GGNN	M1#: 0225	Mv 1 connection terminal (error if not connected) GG: Group No. NN : terminal No.
★ 26	▲	GGNN	M2#: 0225	Mv 2 connection terminal (error if not connected) GG: Group No. NN : terminal No.
★ 27	▲	GGNN	A1#: 0225	Ao 1 connection terminal (error if not connected) GG: Group No. NN : terminal No.
★ 28	▲	GGNN	A2#: 0225	Ao 2 connection terminal (error if not connected) GG: Group No. NN : terminal No.
PV / MV SETTING				
★ 30	▲	-15.00 – 115.00 %	PH1: NNN.NN	Pv 1 high alarm setpoint (for error judgment)
★ 31	▲	-15.00 – 115.00 %	PL1: NNN.NN	Pv 1 low alarm setpoint (for error judgment)
★ 32	▲	-15.00 – 115.00 %	PH2: NNN.NN	Pv 2 high alarm setpoint (for error judgment)
★ 33	▲	-15.00 – 115.00 %	PL2: NNN.NN	Pv 2 low alarm setpoint (for error judgment)
★ 34	▲	0.00 – 115.00 %	ML1: NNN.NN	Mv 1 deviation alarm setpoint (for error judgment)
★ 35	▲	0.00 – 115.00 %	ML2: NNN.NN	Mv 2 deviation alarm setpoint (for error judgment)
★ 36	▲	MM	TP1: MM	Pv 1 input type [MM: input type No.] 12: S 19: Pt100 (JIS '97, IEC) 0:-10-10 V 6: K 13: C 20: Pt100 (JIS '89) 1: -1-1 V 7: E 14: N 21: JPt100 (JIS '89) 2: 0-10 V 8: J 15: U 22: Pt50 (JIS '81) 3: 1-5 V 9: T 16: L 23: Ni100 4: 0-1 V 10: B 17: P 24: MS 5: 4-20 mA 11: R 18: PR 25: DS (Set ITEM37...39 for Pv 1 input type 6...23)
★ 37	▲	-272.0 – 3000.0	HT1: NNNN.N	Pv 1 upper range temperature
★ 38	▲	-272.0 – 3000.0	LT1: NNNN.N	Pv 1 lower range temperature
★ 39	▲	0, 1	CJ1: N	Pv 1 cold junction compensation (0: Without, 1: With)

ITEM	MDFY	DATA INPUT	DISPLAY (e.g.)	CONTENTS
★ 40	▲	MM	TP2: MM	Pv 2 input type [MM: input type No.] 12: S 19: Pt100 (JIS '97, IEC) 0:-10-10 V 6: K 13: C 20: Pt100 (JIS '89) 1: -1-1 V 7: E 14: N 21: JPt100 (JIS '89) 2: 0-10 V 8: J 15: U 22: Pt50 (JIS '81) 3: 1-5 V 9: T 16: L 23: Ni100 4: 0-1 V 10: B 17: P 24: MS 5: 4-20 mA 11: R 18: PR 25: DS (Set ITEM41...43 for Pv 1 input type 6...23)
★ 41	▲	-272.0 – 3000.0	HT2: NNNN.N	Pv 2 upper range temperature
★ 42	▲	-272.0 – 3000.0	LT2: NNNN.N	Pv 2 lower range temperature
★ 43	▲	0, 1	CJ2: N	Pv 2 cold junction compensation (0: without, 1: with)
44	▲ ❄	0, 1	11: N	Pv 1 error contact output
45	▲ ❄	0, 1	12: N	Pv 2 error contact output
46	▲ ❄	0, 1	13: N	Mv 1 error contact output
47	▲ ❄	0, 1	14: N	Mv 2 error contact output
ANALOG I/O ZERO/SPAN ADJUSTMENTS				
★ 50	▲	±115.00 %	PZ1: 0.00	Pv 1 zero adjustment (zero bias)
★ 51	▲	±3.2000	PS1: 1.0000	Pv 1 span adjustment (gain)
★ 52	▲	±115.00 %	PZ2: 0.00	Pv 2 zero adjustment (zero bias)
★ 53	▲	±3.2000	PS2: 1.0000	Pv 2 span adjustment (gain)
★ 54	▲	±115.00 %	MZ1: 0.00	Mv 1 zero adjustment (zero bias)
★ 55	▲	±3.2000	MS1: 1.0000	Mv 1 span adjustment (gain)
★ 56	▲	±115.00 %	MZ2: 0.00	Mv 2 zero adjustment (zero bias)
★ 57	▲	±3.2000	MS2: 1.0000	Mv 2 span adjustment (gain)
★ 58	▲	±115.00 %	IZ1: 0.00	Ai 1 zero adjustment (zero bias)
★ 59	▲	±3.2000	IS1: 1.0000	Ai 1 span adjustment (gain)
★ 60	▲	±115.00 %	IZ2: 0.00	Ai 2 zero adjustment (zero bias)
★ 61	▲	±3.2000	IS2: 1.0000	Ai 2 span adjustment (gain)
★ 62	▲	±115.00 %	IZ3: 0.00	Ai 3 zero adjustment (zero bias)
★ 63	▲	±3.2000	IS3: 1.0000	Ai 3 span adjustment (gain)
★ 64	▲	±115.00 %	IZ4: 0.00	Ai 4 zero adjustment (zero bias)
★ 65	▲	±3.2000	IS4: 1.0000	Ai 4 span adjustment (gain)
★ 66	▲	±115.00 %	CZ1: 0.00	Mv 1 check input zero adjustment (zero bias)
★ 67	▲	±3.2000	CS1: 1.0000	Mv 1 check input span adjustment (gain)
★ 68	▲	±115.00 %	CZ2: 0.00	Mv 2 check input zero adjustment (zero bias)
★ 69	▲	±3.2000	CS2: 1.0000	Mv 2 check input span adjustment (gain)
★ 70	▲	±115.00 %	OZ1: 0.00	Ao 1 zero adjustment (zero bias)
★ 71	▲	±3.2000	OS1: 1.0000	Ao 1 span adjustment (gain)
★ 72	▲	±115.00 %	OZ2: 0.00	Ao 2 zero adjustment (zero bias)
★ 73	▲	±3.2000	OS2: 1.0000	Ao 2 span adjustment (gain)

SC200W Extension Field Terminal 2

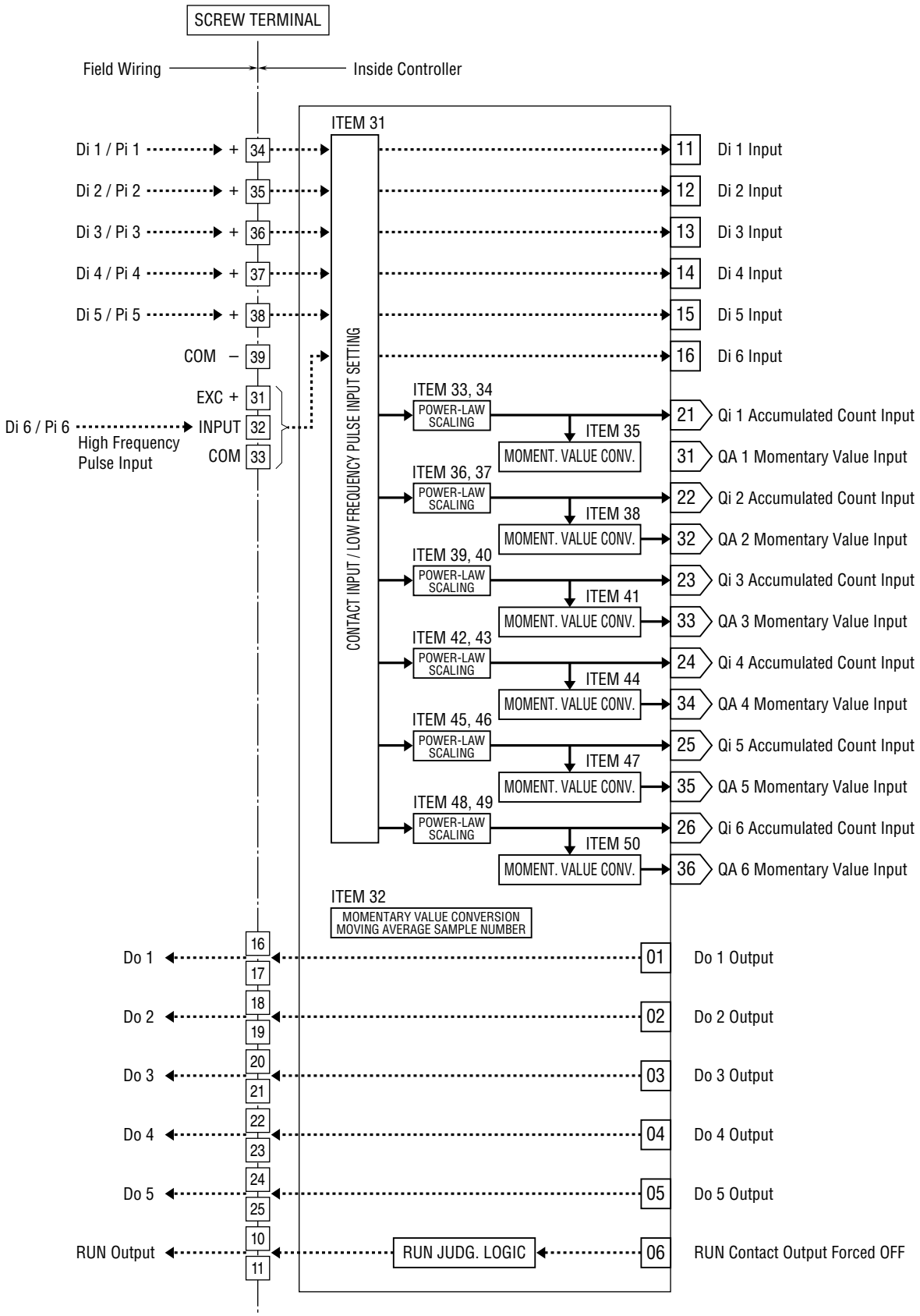

ITEM 02 has no error indication. It is indicated in GROUP 01 (Field Terminal).

GROUP [05] ★: Setting data

ITEM	MDFY	DATA INPUT	DISPLAY (e.g.)	CONTENTS
01	●	(always modifiable)		■ MAINTENANCE SWITCH (lock command) Same mode for Extension Field Terminal 1 and 2
		0	MT: 0	MONITOR mode: data monitoring only
		1	MT: 1	PROGRAM mode: "▲" marked data modifiable
		S	MT: S	SIMULATION mode: "❄" marked data modifiable
10	**IND**	**13**	**MD: 13**	**EXTENSION FIELD TERMINAL 2 (model)**
DISCRETE INPUT INDICATION				
11	▲ ❄	0, 1 or 0 – 9999	11: N or 21: NNNN	Di 1 input indication or Qi 1 accumulated count indication
12	▲ ❄	0, 1 or 0 – 9999	12: N or 22: NNNN	Di 2 input indication or Qi 2 accumulated count indication
13	▲ ❄	0, 1 or 0 – 9999	13: N or 23: NNNN	Di 3 input indication or Qi 3 accumulated count indication
14	▲ ❄	0, 1 or 0 – 9999	14: N or 24: NNNN	Di 4 input indication or Qi 4 accumulated count indication
15	▲ ❄	0, 1 or 0 – 9999	15: N or 25: NNNN	Di 5 input indication or Qi 5 accumulated count indication
16	▲ ❄	0, 1 or 0 – 9999	16: N or 26: NNNN	Di 6 input indication or Qi 6 accumulated count indication
17	▲ ❄	-15.00 – 115.00 %	31: NNN.NN	QA 1 momentary value indication
18	▲ ❄	-15.00 – 115.00 %	32: NNN.NN	QA 2 momentary value indication
19	▲ ❄	-15.00 – 115.00 %	33: NNN.NN	QA 3 momentary value indication
20	▲ ❄	-15.00 – 115.00 %	34: NNN.NN	QA 4 momentary value indication
21	▲ ❄	-15.00 – 115.00 %	35: NNN.NN	QA 5 momentary value indication
22	▲ ❄	-15.00 – 115.00 %	36: NNN.NN	QA 6 momentary value indication
DISCRETE OUTPUT INDICATION				
23	▲ ❄	0, 1	01: N	Do 1 output indication
24	▲ ❄	0, 1	02: N	Do 2 output indication
25	▲ ❄	0, 1	03: N	Do 3 output indication
26	▲ ❄	0, 1	04: N	Do 4 output indication
27	▲ ❄	0, 1	05: N	Do 5 output indication
28	▲ ❄	0, 1	06: N	RUN contact output forced OFF (1: OFF)
PULSE INPUT SETTING				
★ 31	▲		PD: NNNNN	Di/Pi selection (0 = Di, 1 = Pi) (10^0 : Di 1, 10^1 : Di 2, 10^2 : Di 3, 10^3 : Di 4, 10^4 : Di 5) (Remark 1) Di 6 is specified in ITEM 52
★ 32	▲	1-16	KR: NN	Pi moving average sample number for momentary value conversion
★ 33	▲	1, 0, -1, -2, -3	D1: -1	Qi 1 power-law scaling (10's power 1: x 10, 0: x 1, -1: x 0.1, -2: x 0.01, -3: x 0.001)
★ 34	▲	0.0000 – 6.4000	S1: N.NNNN	Qi 1 scaling factor
★ 35	▲	0.00 – 10000.00	K1: NNNNN.NN	QA 1 momentary value conversion factor (number of pulses per second at 100% momentary value input)
★ 36	▲	1, 0, -1, -2, -3	D2: -1	Qi 2 power-law scaling (10's power 1: x 10, 0: x 1, -1: x 0.1, -2: x 0.01, -3: x 0.001)
★ 37	▲	0.0000 – 6.4000	S2: N.NNNN	Qi 2 scaling factor
★ 38	▲	0.00 – 10000.00	K2: NNNNN.NN	QA 2 momentary value conversion factor (number of pulses per second at 100% momentary value input)
★ 39	▲	1, 0, -1, -2, -3	D3: -1	Qi 3 power-law scaling (10's power 1: x 10, 0: x 1, -1: x 0.1, -2: x 0.01, -3: x 0.001)
★ 40	▲	0.0000 – 6.4000	S3: N.NNNN	Qi 3 scaling factor
★ 41	▲	0.00 – 10000.00	K3: NNNNN.NN	QA 3 momentary value conversion factor (number of pulses per second at 100% momentary value input)

ITEM	MDFY	DATA INPUT	DISPLAY (e.g.)	CONTENTS
★ 42	▲	1, 0, -1, -2, -3	D4: -1	Qi 4 power-law scaling (10's power 1: x 10, 0: x 1, -1: x 0.1, -2: x 0.01, -3: x 0.001)
★ 43	▲	0.0000 – 6.4000	S4: N.NNNN	Qi 4 scaling factor
★ 44	▲	0.00 – 10000.00	K4: NNNNN.NN	QA 4 momentary value conversion factor (number of pulses per second at 100% momentary value input)
★ 45	▲	1, 0, -1, -2, -3	D5: -1	Qi 5 power-law scaling (10's power 1: x 10, 0: x 1, -1: x 0.1, -2: x 0.01, -3: x 0.001)
★ 46	▲	0.0000 – 6.4000	S5: N.NNNN	Qi 5 scaling factor
★ 47	▲	0.00 – 10000.00	K5: NNNNN.NN	QA 5 momentary value conversion factor (number of pulses per second at 100% momentary value input)
★ 48	▲	1, 0, -1, -2, -3	D6: -1	Qi 6 power-law scaling (10's power 1: x 10, 0: x 1, -1: x 0.1, -2: x 0.01, -3: x 0.001)
★ 49	▲	0.0000 – 6.4000	S6: N.NNNN	Qi 6 scaling factor
★ 50	▲	0.00 – 10000.00	K6: NNNNN.NN	QA 6 momentary value conversion factor (number of pulses per second at 100% momentary value input)
DISCRETE OUTPUT SETTING				
★ 51	▲	0, 1	DM: N	Abnormality contact output mode (0: Normal, 1: All contact outputs OFF at RUN contact OFF)
HIGH SPEED PULSE INPUT SETTING				
★ 52	▲	0, 1	PD6: N	Di/Pi selection (0: Di 6, 1: Pi 6)

Remark 1: ITEM 31: Di/Pi selection

Pulse outputs become undefined when 'Di' is selected; while discrete outputs become undefined when 'Pi' is selected.

SC110 Field Terminal

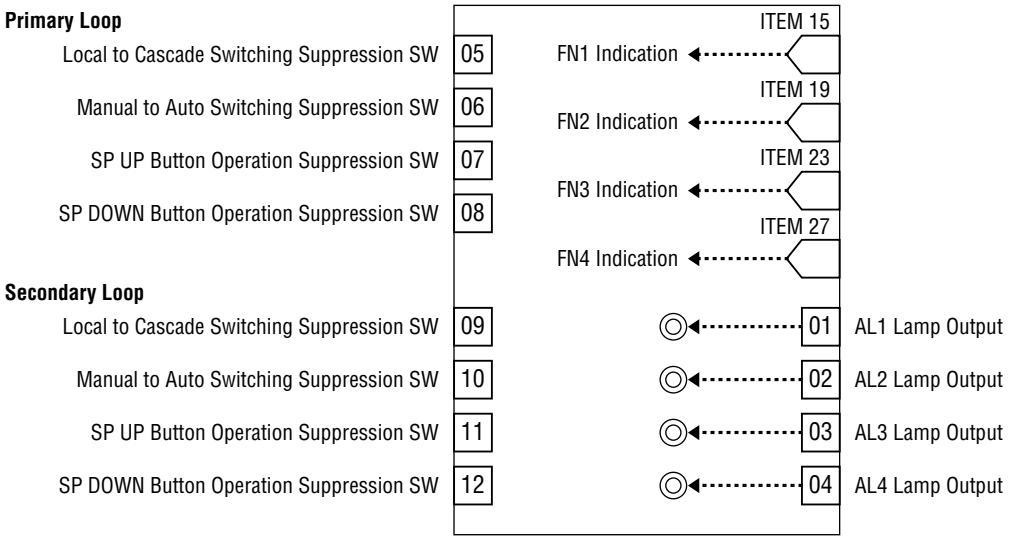

GROUP [01] ★: Setting data

ITEM	MDFY	DATA INPUT	DISPLAY (e.g.)	CONTENTS
01	●	(always modifiable)		■ MAINTENANCE SWITCH (lock command) Same mode for Extension Field Terminal 1 and 2
		0	MT: 0	MONITOR mode: data monitoring only
		1	MT: 1	PROGRAM mode: "▲" marked data modifiable
		S	MT: S	SIMULATION mode: "❄" marked data modifiable
02	IND	No input	ER: NN	Error indication (00: normal, 01 – 90: error) Extension Field Terminal 1 and 2 included
10	**IND**	**11**	**MD: 11**	**FIELD TERMINAL (model)**
INDICATION				
★ 11	▲	2, 3	GR: 2	Primary loop Group No. (valid after reset)
★ 12	▲	0, 1	M1: N	Primary MV operational range (0: ±115%, 1: -15 – +115%)
★ 13	▲	0, 1	M2: N	Secondary MV operational range (0: ±115%, 1: -15 – +115%)
★ 15	▲	GGNN	1F: 3121	FN1 connection terminal for indication GG: Group No. NN: terminal No.
★ 16	▲	±32000	1H: 15000	FN1 upper range (in engineering unit)
★ 17	▲	±32000	1L: 0	FN1 lower range (in engineering unit)
★ 18	▲	0, 1, 2, 3, 4, 5	1D: 1	FN1 decimal point position (from rightmost digit)
★ 19	▲	GGNN	2F: GGNN	FN2 connection terminal for indication GG: Group No. NN: terminal No.
★ 20	▲	±32000	2H: NNNNN	FN2 upper range (in engineering unit)
★ 21	▲	±32000	2L: NNNNN	FN2 lower range (in engineering unit)
★ 22	▲	0, 1, 2, 3, 4, 5	2D: N	FN2 decimal point position (from rightmost digit)
★ 23	▲	GGNN	3F: GGNN	FN3 connection terminal for indication GG: Group No. NN: terminal No.
★ 24	▲	±32000	3H: NNNNN	FN3 upper range (in engineering unit)
★ 25	▲	±32000	3L: NNNNN	FN3 lower range (in engineering unit)
★ 26	▲	0, 1, 2, 3, 4, 5	3D: N	FN3 decimal point position (from rightmost digit)
★ 27	▲	GGNN	4F: GGNN	FN4 connection terminal for indication GG: Group No. NN: terminal No.
★ 28	▲	±32000	4H: NNNNN	FN4 upper range (in engineering unit)
★ 29	▲	±32000	4L: NNNNN	FN4 lower range (in engineering unit)
★ 30	▲	0, 1, 2, 3, 4, 5	4D: N	FN4 decimal point position (from rightmost digit)

ITEM	MDFY	DATA INPUT	DISPLAY (e.g.)	CONTENTS
★ 31	▲	alphanumeric	T1: XXX...X	FN1 tag name (max. 10 characters)
★ 32	▲	alphanumeric	T2: XXX...X	FN2 tag name (max. 10 characters)
★ 33	▲	alphanumeric	T3: XXX...X	FN3 tag name (max. 10 characters)
★ 34	▲	alphanumeric	T4: XXX...X	FN4 tag name (max. 10 characters)
★ 35	▲	alphanumeric	U1: XXX...X	FN1 engineering unit (max. 8 characters)
★ 36	▲	alphanumeric	U2: XXX...X	FN2 engineering unit (max. 8 characters)
★ 37	▲	alphanumeric	U3: XXX...X	FN3 engineering unit (max. 8 characters)
★ 38	▲	alphanumeric	U4: XXX...X	FN4 engineering unit (max. 8 characters)
39	▲ ❄	0, 1	01: N	AL1 lamp output
40	▲ ❄	0, 1	02: N	AL2 lamp output
41	▲ ❄	0, 1	03: N	AL3 lamp output
42	▲ ❄	0, 1	04: N	AL4 lamp output
★ 43	▲	alphanumeric	L1: XXXX	AL1 comment (max. 4 characters)
★ 44	▲	alphanumeric	L2: XXXX	AL2 comment (max. 4 characters)
★ 45	▲	alphanumeric	L3: XXXX	AL3 comment (max. 4 characters)
★ 46	▲	alphanumeric	L4: XXXX	AL4 comment (max. 4 characters)
CONTROL				
Primary Loop				
51	▲ ❄	0, 1	05: N	Local to Cascade switching suppress. SW (0: permit, 1: prohibit)
52	▲ ❄	0, 1	06: N	Manual to Auto switching suppress. SW (0: permit, 1: prohibit)
53	▲ ❄	0, 1	07: N	SP UP button operation suppress. SW (0: permit, 1: prohibit)
54	▲ ❄	0, 1	08: N	SP DOWN button operation suppress. SW (0: permit, 1: prohibit)
Secondary Loop				
55	▲ ❄	0, 1	09: N	Local to Cascade switching suppress. SW (0: permit, 1: prohibit)
56	▲ ❄	0, 1	10: N	Manual to Auto switching suppress. SW (0: permit, 1: prohibit)
57	▲ ❄	0, 1	11: N	SP UP button operation suppress. SW (0: permit, 1: prohibit)
58	▲ ❄	0, 1	12: N	SP DOWN button operation suppress. SW (0: permit, 1: prohibit)
Common Items				
61	▲	0, 1	21: 0	SP UP button operation status (0: OFF, 1: ON) SC 1.70
62	▲	0, 1	22: 0	SP DOWN button operation status (0: OFF, 1: ON) SC 1.70
63	▲	0, 1	23: 0	MV UP button operation status (0: OFF, 1: ON) SC 1.70
64	▲	0, 1	24: 0	MV DOWN button operation status (0: OFF, 1: ON) SC 1.70
★ 71	▲	10 – 100 s/100%	ST: 40	Time of holding SP UP or DOWN button SC 1.70
★ 72	▲	10 – 100 s/100%	ST: 40	Time of holding MV UP or DOWN button SC 1.70

Remark 1: ITEM 61 – 64: Please perform button operations with two times more than computation cycle.
Remark 2: ITEM 61 – 64: Obtains button operation status regardless of screen functions such as A/M and C/L.

SC110 Extension Field Terminal 1

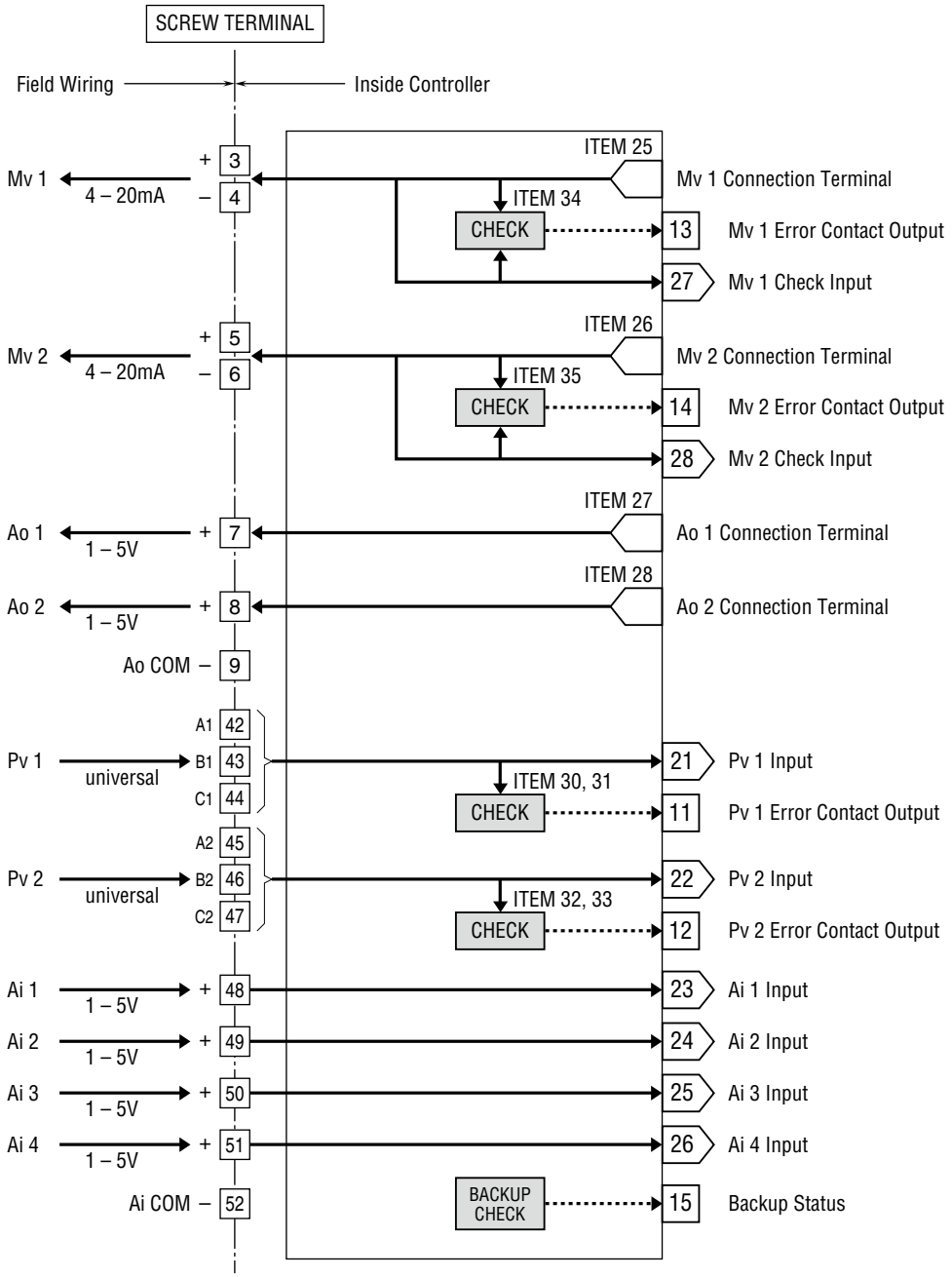

ITEM 02 has no error indication. It is indicated in GROUP 01 (Field Terminal).

GROUP [04] ★: Setting data

ITEM	MDFY	DATA INPUT	DISPLAY (e.g.)	CONTENTS
01	●	(always modifiable)		■ MAINTENANCE SWITCH (lock command) Same mode for Extension Field Terminal 1 and 2
		0	MT: 0	MONITOR mode: data monitoring only
		1	MT: 1	PROGRAM mode: "▲" marked data modifiable
		S	MT: S	SIMULATION mode: "❄" marked data modifiable
10	**IND**	**12**	**MD: 12**	**EXTENSION FIELD TERMINAL 1 (model)**
ANALOG INPUT INDICATION				
11	▲ ❄	-15.00 – 115.00 %	21: NNN.NN	Pv 1 input
12	▲ ❄	-15.00 – 115.00 %	22: NNN.NN	Pv 2 input
13	▲ ❄	-15.00 – 115.00 %	23: NNN.NN	Ai 1 input
14	▲ ❄	-15.00 – 115.00 %	24: NNN.NN	Ai 2 input
15	▲ ❄	-15.00 – 115.00 %	25: NNN.NN	Ai 3 input
16	▲ ❄	-15.00 – 115.00 %	26: NNN.NN	Ai 4 input
17	▲ ❄	-15.00 – 115.00 %	27: NNN.NN	Mv 1 check input
18	▲ ❄	-15.00 – 115.00 %	28: NNN.NN	Mv 2 check input
19	▲ ❄	±320.00Unit	29: NNN.NNUnit	Pv 1 input in engineering unit value
20	▲ ❄	±320.00Unit	30: NNN.NNUnit	Pv 2 input in engineering unit value
ANALOG OUTPUT INDICATION				
21	▲	-15.00 – 115.00 %	MV1: NNN.NN	Mv 1 output
22	▲	-15.00 – 115.00 %	MV2: NNN.NN	Mv 2 output
23	▲	-15.00 – 115.00 %	AO1: NNN.NN	Ao 1 output
24	▲	-15.00 – 115.00 %	AO2: NNN.NN	Ao 2 output
ANALOG OUTPUT CONNECTION TERMINAL				
★ 25	▲	GGNN	M1#: 0225	Mv 1 connection terminal (error if not connected) GG: Group No. NN : terminal No.
★ 26	▲	GGNN	M2#: 0225	Mv 2 connection terminal (error if not connected) GG: Group No. NN : terminal No.
★ 27	▲	GGNN	A1#: 0225	Ao 1 connection terminal (error if not connected) GG: Group No. NN : terminal No.
★ 28	▲	GGNN	A2#: 0225	Ao 2 connection terminal (error if not connected) GG: Group No. NN : terminal No.
PV / MV SETTING				
★ 30	▲	-15.00 – 115.00 %	PH1: NNN.NN	Pv 1 high alarm setpoint (for error judgment)
★ 31	▲	-15.00 – 115.00 %	PL1: NNN.NN	Pv 1 low alarm setpoint (for error judgment)
★ 32	▲	-15.00 – 115.00 %	PH2: NNN.NN	Pv 2 high alarm setpoint (for error judgment)
★ 33	▲	-15.00 – 115.00 %	PL2: NNN.NN	Pv 2 low alarm setpoint (for error judgment)
★ 34	▲	0.00 – 115.00 %	ML1: NNN.NN	Mv 1 deviation alarm setpoint (for error judgment)
★ 35	▲	0.00 – 115.00 %	ML2: NNN.NN	Mv 2 deviation alarm setpoint (for error judgment)
★ 36	▲	MM	TP1: MM	Pv 1 input type [MM: input type No.] 0:-10-10 V, 1: -1-1 V, 2: 0-10 V, 3: 1-5 V, 4: 0-1 V, 5: 4-20 mA 6: K, 7: E, 8: J, 9: T, 10: B, 11: R 12: S, 13: C, 14: N, 15: U, 16: L, 17: P, 18: PR 19: Pt100 (JIS '97, IEC), 20: Pt100 (JIS '89), 21: JPt100 (JIS '89), 22: Pt50 (JIS '81), 23: Ni100, 24: MS, 25: DS (Set ITEM37...39 for Pv 1 input type 6...23)
★ 37	▲	-272.0 – 3000.0	HT1: NNNN.N	Pv 1 upper range temperature
★ 38	▲	-272.0 – 3000.0	LT1: NNNN.N	Pv 1 lower range temperature
★ 39	▲	0, 1	CJ1: N	Pv 1 cold junction compensation (0: Without, 1: With)

ITEM	MDFY	DATA INPUT	DISPLAY (e.g.)	CONTENTS
★ 40	▲	MM	TP2: MM	Pv 2 input type [MM: input type No.] 12: S 19: Pt100 (JIS '97, IEC) 0:-10-10 V 6: K 13: C 20: Pt100 (JIS '89) 1: -1-1 V 7: E 14: N 21: JPt100 (JIS '89) 2: 0-10 V 8: J 15: U 22: Pt50 (JIS '81) 3: 1-5 V 9: T 16: L 23: Ni100 4: 0-1 V 10: B 17: P 24: MS 5: 4-20 mA 11: R 18: PR 25: DS (Set ITEM41...43 for Pv 1 input type 6...23)
★ 41	▲	-272.0 – 3000.0	HT2: NNNN.N	Pv 2 upper range temperature
★ 42	▲	-272.0 – 3000.0	LT2: NNNN.N	Pv 2 lower range temperature
★ 43	▲	0, 1	CJ2: N	Pv 2 cold junction compensation (0: without, 1: with)
44	▲ ❄	0, 1	11: N	Pv 1 error contact output
45	▲ ❄	0, 1	12: N	Pv 2 error contact output
46	▲ ❄	0, 1	13: N	Mv 1 error contact output
47	▲ ❄	0, 1	14: N	Mv 2 error contact output
ANALOG I/O ZERO/SPAN ADJUSTMENTS				
★ 50	▲	±115.00 %	PZ1: 0.00	Pv 1 zero adjustment (zero bias)
★ 51	▲	±3.2000	PS1: 1.0000	Pv 1 span adjustment (gain)
★ 52	▲	±115.00 %	PZ2: 0.00	Pv 2 zero adjustment (zero bias)
★ 53	▲	±3.2000	PS2: 1.0000	Pv 2 span adjustment (gain)
★ 54	▲	±115.00 %	MZ1: 0.00	Mv 1 zero adjustment (zero bias)
★ 55	▲	±3.2000	MS1: 1.0000	Mv 1 span adjustment (gain)
★ 56	▲	±115.00 %	MZ2: 0.00	Mv 2 zero adjustment (zero bias)
★ 57	▲	±3.2000	MS2: 1.0000	Mv 2 span adjustment (gain)
★ 58	▲	±115.00 %	IZ1: 0.00	Ai 1 zero adjustment (zero bias)
★ 59	▲	±3.2000	IS1: 1.0000	Ai 1 span adjustment (gain)
★ 60	▲	±115.00 %	IZ2: 0.00	Ai 2 zero adjustment (zero bias)
★ 61	▲	±3.2000	IS2: 1.0000	Ai 2 span adjustment (gain)
★ 62	▲	±115.00 %	IZ3: 0.00	Ai 3 zero adjustment (zero bias)
★ 63	▲	±3.2000	IS3: 1.0000	Ai 3 span adjustment (gain)
★ 64	▲	±115.00 %	IZ4: 0.00	Ai 4 zero adjustment (zero bias)
★ 65	▲	±3.2000	IS4: 1.0000	Ai 4 span adjustment (gain)
★ 66	▲	±115.00 %	CZ1: 0.00	Mv 1 check input zero adjustment (zero bias)
★ 67	▲	±3.2000	CS1: 1.0000	Mv 1 check input span adjustment (gain)
★ 68	▲	±115.00 %	CZ2: 0.00	Mv 2 check input zero adjustment (zero bias)
★ 69	▲	±3.2000	CS2: 1.0000	Mv 2 check input span adjustment (gain)
★ 70	▲	±115.00 %	OZ1: 0.00	Ao 1 zero adjustment (zero bias)
★ 71	▲	±3.2000	OS1: 1.0000	Ao 1 span adjustment (gain)
★ 72	▲	±115.00 %	OZ2: 0.00	Ao 2 zero adjustment (zero bias)
★ 73	▲	±3.2000	OS2: 1.0000	Ao 2 span adjustment (gain)
BACKUP (Mv 2)				
80	▲	-15.00 – 115.00 %	MVB: NNN.NN	Manual loading MV
★ 81	▲	0, 1	BSW: NNN.NN	Automatic switching (0: disable, 1: enable)
★ 82	▲	0, 1	BMD: NNN.NN	Backup output mode (0: track back, 1: preset value)
★ 83	▲	0.00 – 115.00 %/s	BVL: NNN.NN	Output rate-of-change limit (0.00: no limit applied)
★ 84	▲	-15.00 – 115.00 %	BFV: NNN.NN	Preset value (applied with ITEM 82 DATA 1)
★ 85	▲	0, 1	BBL: N	Backup recovery mode (0: auto tracking, 1: manual tracking)
★ 86	▲	2, 3	BGR: N	Backup GROUP
87	▲	0, 1	15: N	Backup status (0: normal, 1: backup) SC 1.50

SC110 Extension Field Terminal 2

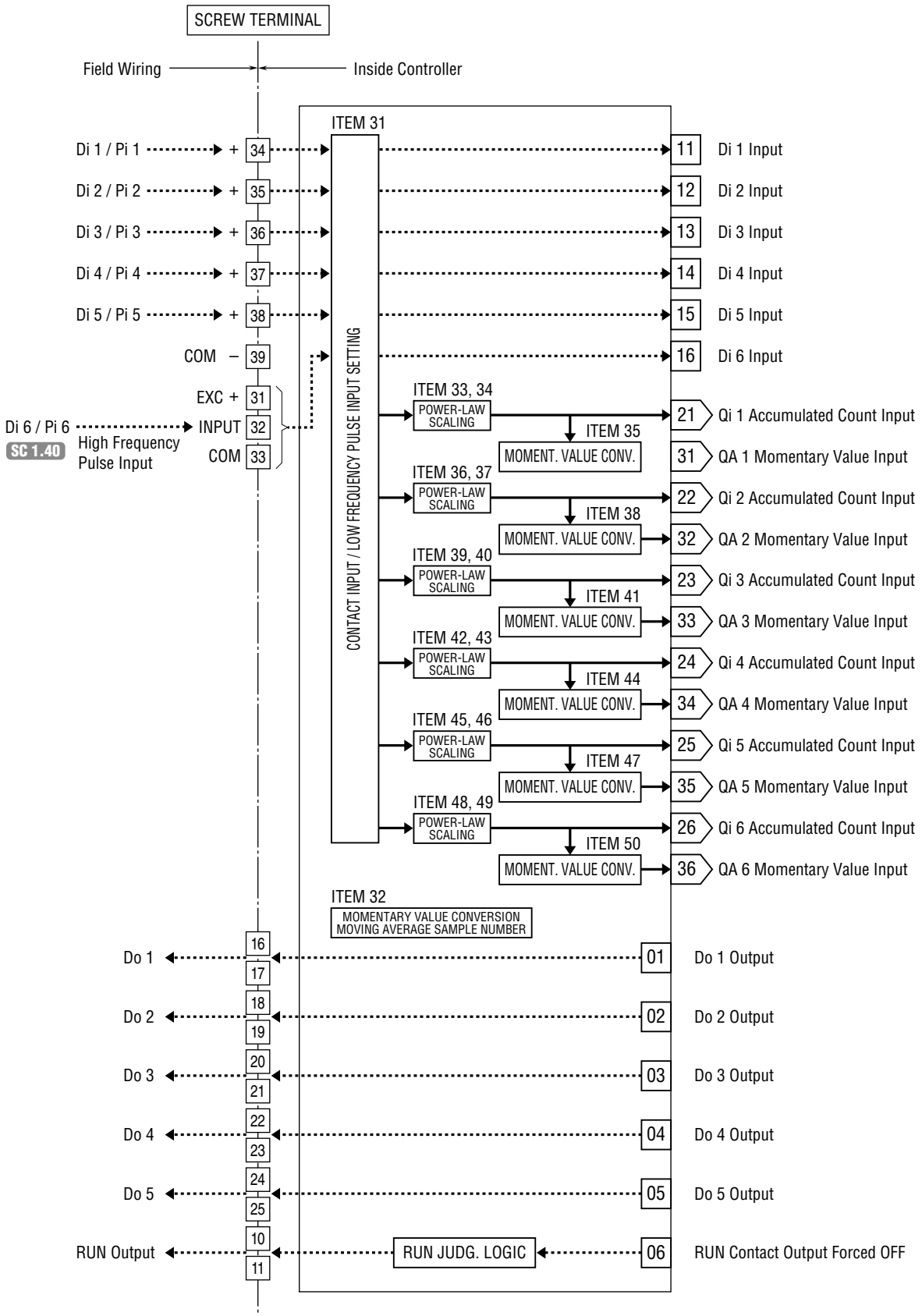

ITEM 02 has no error indication. It is indicated in GROUP 01 (Field Terminal).

GROUP [05] ★: Setting data

ITEM	MDFY	DATA INPUT	DISPLAY (e.g.)	CONTENTS
01	●	(always modifiable)		■ MAINTENANCE SWITCH (lock command) Same mode for Extension Field Terminal 1 and 2
		0	MT: 0	MONITOR mode: data monitoring only
		1	MT: 1	PROGRAM mode: "▲" marked data modifiable
		S	MT: S	SIMULATION mode: "❄" marked data modifiable
10	**IND**	**13**	**MD: 13**	**EXTENSION FIELD TERMINAL 2 (model)**
DISCRETE INPUT INDICATION				
11	▲ ❄	0, 1 or 0 – 9999	11: N or 21: NNNN	Di 1 input indication or Qi 1 accumulated count indication
12	▲ ❄	0, 1 or 0 – 9999	12: N or 22: NNNN	Di 2 input indication or Qi 2 accumulated count indication
13	▲ ❄	0, 1 or 0 – 9999	13: N or 23: NNNN	Di 3 input indication or Qi 3 accumulated count indication
14	▲ ❄	0, 1 or 0 – 9999	14: N or 24: NNNN	Di 4 input indication or Qi 4 accumulated count indication
15	▲ ❄	0, 1 or 0 – 9999	15: N or 25: NNNN	Di 5 input indication or Qi 5 accumulated count indication
16	▲ ❄	0, 1 or 0 – 9999	16: N or 26: NNNN	Di 6 input indication or Qi 6 accumulated count indication
17	▲ ❄	-15.00 – 115.00 %	31: NNN.NN	QA 1 momentary value indication
18	▲ ❄	-15.00 – 115.00 %	32: NNN.NN	QA 2 momentary value indication
19	▲ ❄	-15.00 – 115.00 %	33: NNN.NN	QA 3 momentary value indication
20	▲ ❄	-15.00 – 115.00 %	34: NNN.NN	QA 4 momentary value indication
21	▲ ❄	-15.00 – 115.00 %	35: NNN.NN	QA 5 momentary value indication
22	▲ ❄	-15.00 – 115.00 %	36: NNN.NN	QA 6 momentary value indication
DISCRETE OUTPUT INDICATION				
23	▲ ❄	0, 1	01: N	Do 1 output indication
24	▲ ❄	0, 1	02: N	Do 2 output indication
25	▲ ❄	0, 1	03: N	Do 3 output indication
26	▲ ❄	0, 1	04: N	Do 4 output indication
27	▲ ❄	0, 1	05: N	Do 5 output indication
28	▲ ❄	0, 1	06: N	RUN contact output forced OFF (1: OFF)
PULSE INPUT SETTING				
★ 31	▲		PD: NNNNN	Di/Pi selection (0 = Di, 1 = Pi) (10^0 : Di 1, 10^1 : Di 2, 10^2 : Di 3, 10^3 : Di 4, 10^4 : Di 5) (Remark 1) Di 6 is specified in ITEM 52
★ 32	▲	1-16	KR: NN	Pi moving average sample number for momentary value conversion (QA 1 – QA 5)
★ 33	▲	1, 0, -1, -2, -3	D1: -1	Qi 1 power-law scaling (10's power 1: x 10, 0: x 1, -1: x 0.1, -2: x 0.01, -3: x 0.001)
★ 34	▲	0.0000 – 6.4000	S1: N.NNNN	Qi 1 scaling factor
★ 35	▲	0.00 – 10000.00	K1: NNNNN.NN	QA 1 momentary value conversion factor (number of pulses per second at 100% momentary value input)
★ 36	▲	1, 0, -1, -2, -3	D2: -1	Qi 2 power-law scaling (10's power 1: x 10, 0: x 1, -1: x 0.1, -2: x 0.01, -3: x 0.001)
★ 37	▲	0.0000 – 6.4000	S2: N.NNNN	Qi 2 scaling factor
★ 38	▲	0.00 – 10000.00	K2: NNNNN.NN	QA 2 momentary value conversion factor (number of pulses per second at 100% momentary value input)
★ 39	▲	1, 0, -1, -2, -3	D3: -1	Qi 3 power-law scaling (10's power 1: x 10, 0: x 1, -1: x 0.1, -2: x 0.01, -3: x 0.001)
★ 40	▲	0.0000 – 6.4000	S3: N.NNNN	Qi 3 scaling factor
★ 41	▲	0.00 – 10000.00	K3: NNNNN.NN	QA 3 momentary value conversion factor (number of pulses per second at 100% momentary value input)

ITEM	MDFY	DATA INPUT	DISPLAY (e.g.)	CONTENTS
★ 42	▲	1, 0, -1, -2, -3	D4: -1	Qi 4 power-law scaling (10's power 1: x 10, 0: x 1, -1: x 0.1, -2: x 0.01, -3: x 0.001)
★ 43	▲	0.0000 – 6.4000	S4: N.NNNN	Qi 4 scaling factor
★ 44	▲	0.00 – 10000.00	K4: NNNNN.NN	QA 4 momentary value conversion factor (number of pulses per second at 100% momentary value input)
★ 45	▲	1, 0, -1, -2, -3	D5: -1	Qi 5 power-law scaling (10's power 1: x 10, 0: x 1, -1: x 0.1, -2: x 0.01, -3: x 0.001)
★ 46	▲	0.0000 – 6.4000	S5: N.NNNN	Qi 5 scaling factor
★ 47	▲	0.00 – 10000.00	K5: NNNNN.NN	QA 5 momentary value conversion factor (number of pulses per second at 100% momentary value input)
★ 48	▲	1, 0, -1, -2, -3	D6: -1	Qi 6 power-law scaling (10's power 1: x 10, 0: x 1, -1: x 0.1, -2: x 0.01, -3: x 0.001)
★ 49	▲	0.0000 – 6.4000	S6: N.NNNN	Qi 6 scaling factor
★ 50	▲	0.00 – 10000.00	K6: NNNNN.NN	QA 6 momentary value conversion factor (number of pulses per second at 100% momentary value input)
DISCRETE OUTPUT SETTING				
★ 51	▲	0, 1	DM: N	Abnormality contact output mode (0: Normal, 1: All contact outputs OFF at RUN contact OFF)
HIGH SPEED PULSE INPUT SETTING				
★ 52	▲	0, 1	PD6: N	Di/Pi selection (0: Di 6, 1: Pi 6) SC 1.40

Remark 1: ITEM 31: Di/Pi selection

Pulse outputs become undefined when 'Di' is selected; while discrete outputs become undefined when 'Pi' is selected.

SC210 Field Terminal

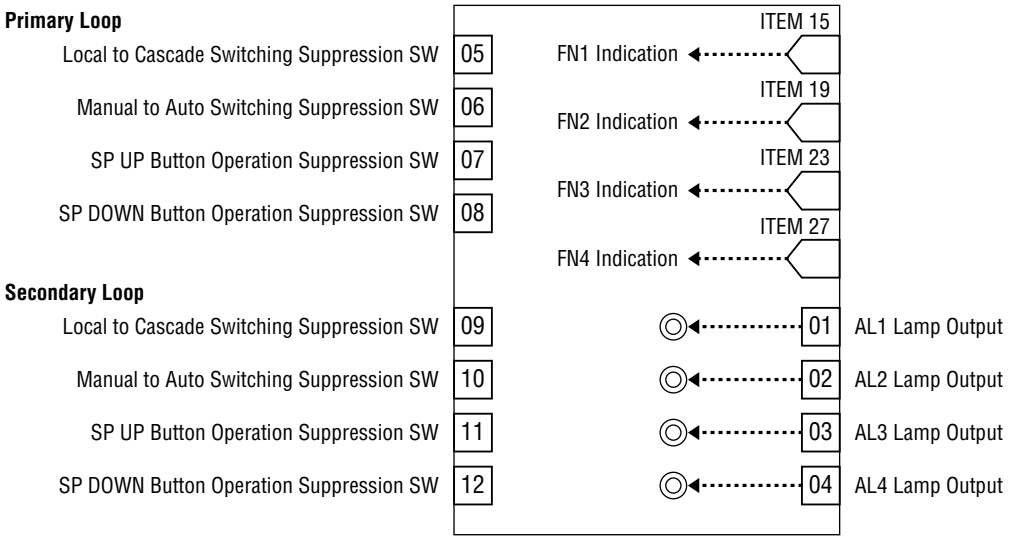

GROUP [01] ★: Setting data

ITEM	MDFY	DATA INPUT	DISPLAY (e.g.)	CONTENTS
01	●	(always modifiable)		■ MAINTENANCE SWITCH (lock command) Same mode for Extension Field Terminal 1 and 2
		0	MT: 0	MONITOR mode: data monitoring only
		1	MT: 1	PROGRAM mode: "▲" marked data modifiable
		S	MT: S	SIMULATION mode: "❄" marked data modifiable
02	IND	No input	ER: NN	Error indication (00: normal, 01 – 90: error) Extension Field Terminal 1 and 2 included
10	**IND**	**11**	**MD: 11**	**FIELD TERMINAL (model)**
INDICATION				
★ 11	▲	2, 3	GR: 2	Primary loop Group No. (valid after reset)
★ 12	▲	0, 1	M1: N	Primary MV operational range (0: ±115%, 1: -15 – +115%)
★ 13	▲	0, 1	M2: N	Secondary MV operational range (0: ±115%, 1: -15 – +115%)
★ 15	▲	GGNN	1F: 3121	FN1 connection terminal for indication GG: Group No. NN: terminal No.
★ 16	▲	±32000	1H: 15000	FN1 upper range (in engineering unit)
★ 17	▲	±32000	1L: 0	FN1 lower range (in engineering unit)
★ 18	▲	0, 1, 2, 3, 4, 5	1D: 1	FN1 decimal point position (from rightmost digit)
★ 19	▲	GGNN	2F: GGNN	FN2 connection terminal for indication GG: Group No. NN: terminal No.
★ 20	▲	±32000	2H: NNNNN	FN2 upper range (in engineering unit)
★ 21	▲	±32000	2L: NNNNN	FN2 lower range (in engineering unit)
★ 22	▲	0, 1, 2, 3, 4, 5	2D: N	FN2 decimal point position (from rightmost digit)
★ 23	▲	GGNN	3F: GGNN	FN3 connection terminal for indication GG: Group No. NN: terminal No.
★ 24	▲	±32000	3H: NNNNN	FN3 upper range (in engineering unit)
★ 25	▲	±32000	3L: NNNNN	FN3 lower range (in engineering unit)
★ 26	▲	0, 1, 2, 3, 4, 5	3D: N	FN3 decimal point position (from rightmost digit)
★ 27	▲	GGNN	4F: GGNN	FN4 connection terminal for indication GG: Group No. NN: terminal No.
★ 28	▲	±32000	4H: NNNNN	FN4 upper range (in engineering unit)
★ 29	▲	±32000	4L: NNNNN	FN4 lower range (in engineering unit)
★ 30	▲	0, 1, 2, 3, 4, 5	4D: N	FN4 decimal point position (from rightmost digit)

ITEM	MDFY	DATA INPUT	DISPLAY (e.g.)	CONTENTS
★ 31	▲	alphanumeric	T1: XXX...X	FN1 tag name (max. 10 characters)
★ 32	▲	alphanumeric	T2: XXX...X	FN2 tag name (max. 10 characters)
★ 33	▲	alphanumeric	T3: XXX...X	FN3 tag name (max. 10 characters)
★ 34	▲	alphanumeric	T4: XXX...X	FN4 tag name (max. 10 characters)
★ 35	▲	alphanumeric	U1: XXX...X	FN1 engineering unit (max. 8 characters)
★ 36	▲	alphanumeric	U2: XXX...X	FN2 engineering unit (max. 8 characters)
★ 37	▲	alphanumeric	U3: XXX...X	FN3 engineering unit (max. 8 characters)
★ 38	▲	alphanumeric	U4: XXX...X	FN4 engineering unit (max. 8 characters)
39	▲ ❄	0, 1	01: N	AL1 lamp output
40	▲ ❄	0, 1	02: N	AL2 lamp output
41	▲ ❄	0, 1	03: N	AL3 lamp output
42	▲ ❄	0, 1	04: N	AL4 lamp output
★ 43	▲	alphanumeric	L1: XXXX	AL1 comment (max. 4 characters)
★ 44	▲	alphanumeric	L2: XXXX	AL2 comment (max. 4 characters)
★ 45	▲	alphanumeric	L3: XXXX	AL3 comment (max. 4 characters)
★ 46	▲	alphanumeric	L4: XXXX	AL4 comment (max. 4 characters)
CONTROL (Remark 1)				
Primary Loop				
51	▲ ❄	0, 1	05: N	Local to Cascade switching suppress. SW (0: permit, 1: prohibit)
52	▲ ❄	0, 1	06: N	Manual to Auto switching suppress. SW (0: permit, 1: prohibit)
53	▲ ❄	0, 1	07: N	SP UP button operation suppress. SW (0: permit, 1: prohibit)
54	▲ ❄	0, 1	08: N	SP DOWN button operation suppress. SW (0: permit, 1: prohibit)
Secondary Loop				
55	▲ ❄	0, 1	09: N	Local to Cascade switching suppress. SW (0: permit, 1: prohibit)
56	▲ ❄	0, 1	10: N	Manual to Auto switching suppress. SW (0: permit, 1: prohibit)
57	▲ ❄	0, 1	11: N	SP UP button operation suppress. SW (0: permit, 1: prohibit)
58	▲ ❄	0, 1	12: N	SP DOWN button operation suppress. SW (0: permit, 1: prohibit)
Common Items				
61	▲	0, 1	21: 0	SP UP button operation status (0: OFF, 1: ON) SC 1.70
62	▲	0, 1	22: 0	SP DOWN button operation status (0: OFF, 1: ON) SC 1.70
63	▲	0, 1	23: 0	MV UP button operation status (0: OFF, 1: ON) SC 1.70
64	▲	0, 1	24: 0	MV DOWN button operation status (0: OFF, 1: ON) SC 1.70
★ 71	▲	10 – 100 s/100%	ST: 40	Time of holding SP UP or DOWN button SC 1.70
★ 72	▲	10 – 100 s/100%	ST: 40	Time of holding MV UP or DOWN button SC 1.70

Remark 1: Control by a host device connected via Modbus prevails the local setting.
Remark 2: ITEM 61 – 64: Please perform button operations with two times more than computation cycle.
Remark 3: ITEM 61 – 64: Obtains button operation status regardless of screen functions such as A/M and C/L.

SC210 Extension Field Terminal 1

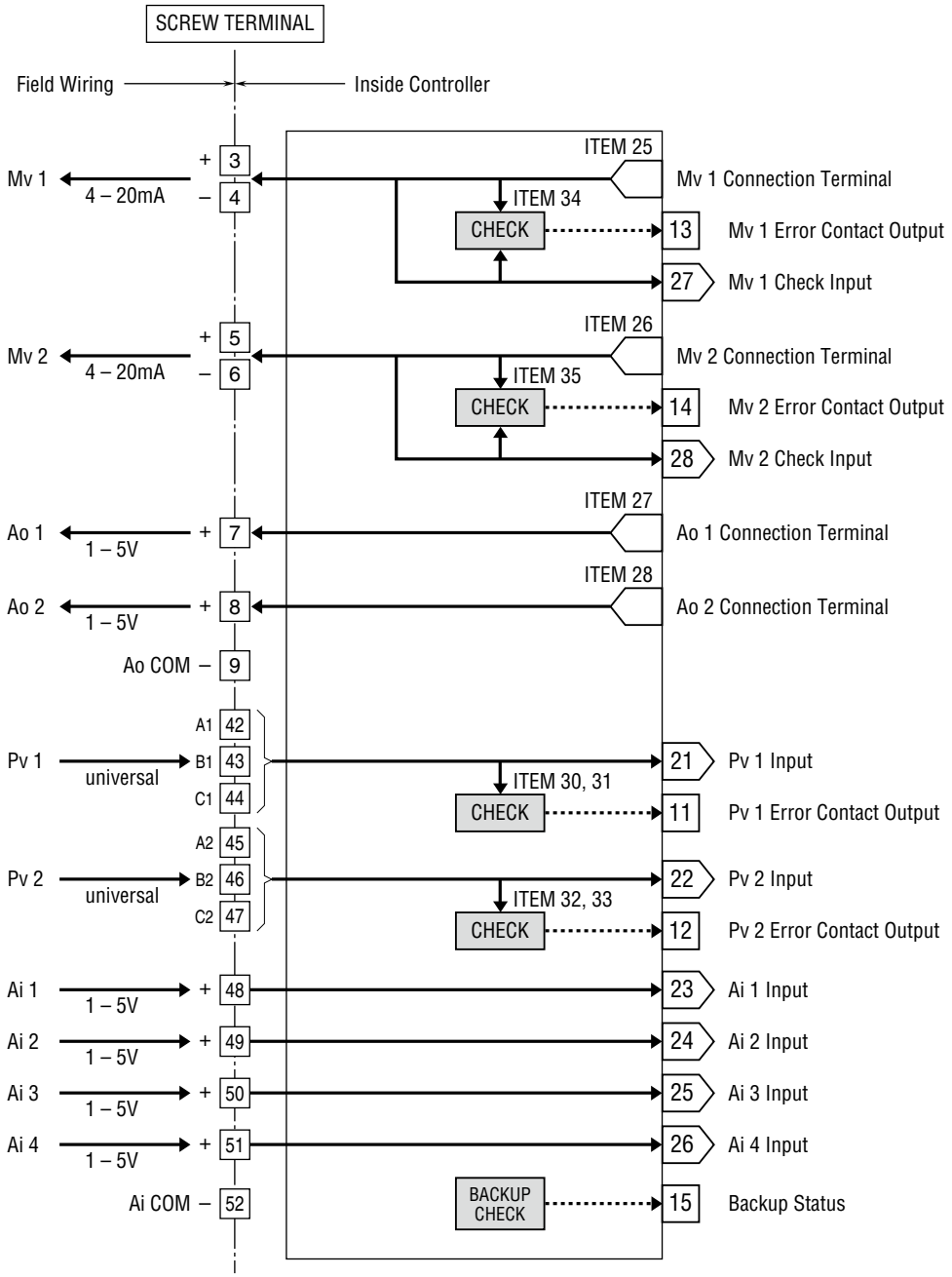

ITEM 02 has no error indication. It is indicated in GROUP 01 (Field Terminal).

GROUP [04] ★: Setting data

ITEM	MDFY	DATA INPUT	DISPLAY (e.g.)	CONTENTS
01	●	(always modifiable)		■ MAINTENANCE SWITCH (lock command) Same mode for Extension Field Terminal 1 and 2
		0	MT: 0	MONITOR mode: data monitoring only
		1	MT: 1	PROGRAM mode: "▲" marked data modifiable
		S	MT: S	SIMULATION mode: "❄" marked data modifiable
10	**IND**	**12**	**MD: 12**	**EXTENSION FIELD TERMINAL 1 (model)**
ANALOG INPUT INDICATION				
11	▲ ❄	-15.00 – 115.00 %	21: NNN.NN	Pv 1 input
12	▲ ❄	-15.00 – 115.00 %	22: NNN.NN	Pv 2 input
13	▲ ❄	-15.00 – 115.00 %	23: NNN.NN	Ai 1 input
14	▲ ❄	-15.00 – 115.00 %	24: NNN.NN	Ai 2 input
15	▲ ❄	-15.00 – 115.00 %	25: NNN.NN	Ai 3 input
16	▲ ❄	-15.00 – 115.00 %	26: NNN.NN	Ai 4 input
17	▲ ❄	-15.00 – 115.00 %	27: NNN.NN	Mv 1 check input
18	▲ ❄	-15.00 – 115.00 %	28: NNN.NN	Mv 2 check input
19	▲ ❄	±320.00Unit	29: NNN.NNUnit	Pv 1 input in engineering unit value
20	▲ ❄	±320.00Unit	30: NNN.NNUnit	Pv 2 input in engineering unit value
ANALOG OUTPUT INDICATION				
21	▲	-15.00 – 115.00 %	MV1: NNN.NN	Mv 1 output
22	▲	-15.00 – 115.00 %	MV2: NNN.NN	Mv 2 output
23	▲	-15.00 – 115.00 %	AO1: NNN.NN	Ao 1 output
24	▲	-15.00 – 115.00 %	AO2: NNN.NN	Ao 2 output
ANALOG OUTPUT CONNECTION TERMINAL				
★ 25	▲	GGNN	M1#: 0225	Mv 1 connection terminal (error if not connected) GG: Group No. NN : terminal No.
★ 26	▲	GGNN	M2#: 0225	Mv 2 connection terminal (error if not connected) GG: Group No. NN : terminal No.
★ 27	▲	GGNN	A1#: 0225	Ao 1 connection terminal (error if not connected) GG: Group No. NN : terminal No.
★ 28	▲	GGNN	A2#: 0225	Ao 2 connection terminal (error if not connected) GG: Group No. NN : terminal No.
PV / MV SETTING				
★ 30	▲	-15.00 – 115.00 %	PH1: NNN.NN	Pv 1 high alarm setpoint (for error judgment)
★ 31	▲	-15.00 – 115.00 %	PL1: NNN.NN	Pv 1 low alarm setpoint (for error judgment)
★ 32	▲	-15.00 – 115.00 %	PH2: NNN.NN	Pv 2 high alarm setpoint (for error judgment)
★ 33	▲	-15.00 – 115.00 %	PL2: NNN.NN	Pv 2 low alarm setpoint (for error judgment)
★ 34	▲	0.00 – 115.00 %	ML1: NNN.NN	Mv 1 deviation alarm setpoint (for error judgment)
★ 35	▲	0.00 – 115.00 %	ML2: NNN.NN	Mv 2 deviation alarm setpoint (for error judgment)
★ 36	▲	MM	TP1: MM	Pv 1 input type [MM: input type No.] 12: S 19: Pt100 (JIS '97, IEC) 0:-10-10 V 6: K 13: C 20: Pt100 (JIS '89) 1: -1-1 V 7: E 14: N 21: JPt100 (JIS '89) 2: 0-10 V 8: J 15: U 22: Pt50 (JIS '81) 3: 1-5 V 9: T 16: L 23: Ni100 4: 0-1 V 10: B 17: P 24: MS 5: 4-20 mA 11: R 18: PR 25: DS (Set ITEM37...39 for Pv 1 input type 6...23)
★ 37	▲	-272.0 – 3000.0	HT1: NNNN.N	Pv 1 upper range temperature
★ 38	▲	-272.0 – 3000.0	LT1: NNNN.N	Pv 1 lower range temperature
★ 39	▲	0, 1	CJ1: N	Pv 1 cold junction compensation (0: Without, 1: With)

ITEM	MDFY	DATA INPUT	DISPLAY (e.g.)	CONTENTS
★ 40	▲	MM	TP2: MM	Pv 2 input type [MM: input type No.] 12: S 19: Pt100 (JIS '97, IEC) 0:-10-10 V 6: K 13: C 20: Pt100 (JIS '89) 1: -1-1 V 7: E 14: N 21: JPt100 (JIS '89) 2: 0-10 V 8: J 15: U 22: Pt50 (JIS '81) 3: 1-5 V 9: T 16: L 23: Ni100 4: 0-1 V 10: B 17: P 24: MS 5: 4-20 mA 11: R 18: PR 25: DS (Set ITEM41...43 for Pv 1 input type 6...23)
★ 41	▲	-272.0 – 3000.0	HT2: NNNN.N	Pv 2 upper range temperature
★ 42	▲	-272.0 – 3000.0	LT2: NNNN.N	Pv 2 lower range temperature
★ 43	▲	0, 1	CJ2: N	Pv 2 cold junction compensation (0: without, 1: with)
44	▲ ❄	0, 1	11: N	Pv 1 error contact output
45	▲ ❄	0, 1	12: N	Pv 2 error contact output
46	▲ ❄	0, 1	13: N	Mv 1 error contact output
47	▲ ❄	0, 1	14: N	Mv 2 error contact output
ANALOG I/O ZERO/SPAN ADJUSTMENTS				
★ 50	▲	±115.00 %	PZ1: 0.00	Pv 1 zero adjustment (zero bias)
★ 51	▲	±3.2000	PS1: 1.0000	Pv 1 span adjustment (gain)
★ 52	▲	±115.00 %	PZ2: 0.00	Pv 2 zero adjustment (zero bias)
★ 53	▲	±3.2000	PS2: 1.0000	Pv 2 span adjustment (gain)
★ 54	▲	±115.00 %	MZ1: 0.00	Mv 1 zero adjustment (zero bias)
★ 55	▲	±3.2000	MS1: 1.0000	Mv 1 span adjustment (gain)
★ 56	▲	±115.00 %	MZ2: 0.00	Mv 2 zero adjustment (zero bias)
★ 57	▲	±3.2000	MS2: 1.0000	Mv 2 span adjustment (gain)
★ 58	▲	±115.00 %	IZ1: 0.00	Ai 1 zero adjustment (zero bias)
★ 59	▲	±3.2000	IS1: 1.0000	Ai 1 span adjustment (gain)
★ 60	▲	±115.00 %	IZ2: 0.00	Ai 2 zero adjustment (zero bias)
★ 61	▲	±3.2000	IS2: 1.0000	Ai 2 span adjustment (gain)
★ 62	▲	±115.00 %	IZ3: 0.00	Ai 3 zero adjustment (zero bias)
★ 63	▲	±3.2000	IS3: 1.0000	Ai 3 span adjustment (gain)
★ 64	▲	±115.00 %	IZ4: 0.00	Ai 4 zero adjustment (zero bias)
★ 65	▲	±3.2000	IS4: 1.0000	Ai 4 span adjustment (gain)
★ 66	▲	±115.00 %	CZ1: 0.00	Mv 1 check input zero adjustment (zero bias)
★ 67	▲	±3.2000	CS1: 1.0000	Mv 1 check input span adjustment (gain)
★ 68	▲	±115.00 %	CZ2: 0.00	Mv 2 check input zero adjustment (zero bias)
★ 69	▲	±3.2000	CS2: 1.0000	Mv 2 check input span adjustment (gain)
★ 70	▲	±115.00 %	OZ1: 0.00	Ao 1 zero adjustment (zero bias)
★ 71	▲	±3.2000	OS1: 1.0000	Ao 1 span adjustment (gain)
★ 72	▲	±115.00 %	OZ2: 0.00	Ao 2 zero adjustment (zero bias)
★ 73	▲	±3.2000	OS2: 1.0000	Ao 2 span adjustment (gain)
BACKUP (Mv 2)				
80	▲	-15.00 – 115.00 %	MVB: NNN.NN	Manual loading MV
★ 81	▲	0, 1	BSW: NNN.NN	Automatic switching (0: disable, 1: enable)
★ 82	▲	0, 1	BMD: NNN.NN	Backup output mode (0: track back, 1: preset value)
★ 83	▲	0.00 – 115.00 %/s	BVL: NNN.NN	Output rate-of-change limit (0.00: no limit applied)
★ 84	▲	-15.00 – 115.00 %	BFV: NNN.NN	Preset value (applied with ITEM 82 DATA 1)
★ 85	▲	0, 1	BBL: N	Backup recovery mode (0: auto tracking, 1: manual tracking)
★ 86	▲	2, 3	BGR: N	Backup GROUP
87	▲	0, 1	15: N	Backup status (0: normal, 1: backup) SC 1.50

SC210 Extension Field Terminal 2

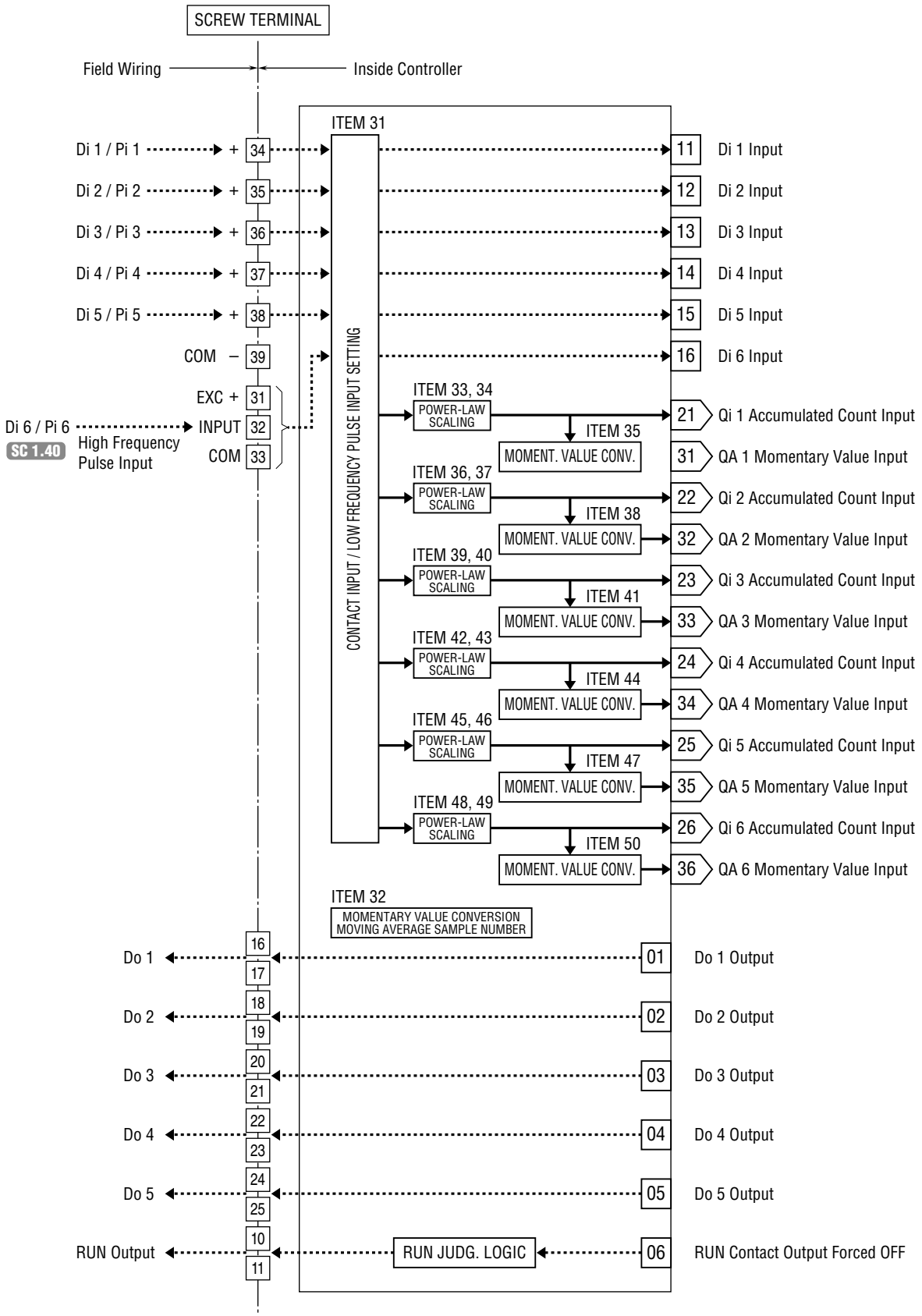

ITEM 02 has no error indication. It is indicated in GROUP 01 (Field Terminal).

GROUP [05] ★: Setting data

ITEM	MDFY	DATA INPUT	DISPLAY (e.g.)	CONTENTS
01	●	(always modifiable)		■ MAINTENANCE SWITCH (lock command) Same mode for Extension Field Terminal 1 and 2
		0	MT: 0	MONITOR mode: data monitoring only
		1	MT: 1	PROGRAM mode: "▲" marked data modifiable
		S	MT: S	SIMULATION mode: "❄" marked data modifiable
10	**IND**	**13**	**MD: 13**	**EXTENSION FIELD TERMINAL 2 (model)**
DISCRETE INPUT INDICATION				
11	▲ ❄	0, 1 or 0 – 9999	11: N or 21: NNNN	Di 1 input indication or Qi 1 accumulated count indication
12	▲ ❄	0, 1 or 0 – 9999	12: N or 22: NNNN	Di 2 input indication or Qi 2 accumulated count indication
13	▲ ❄	0, 1 or 0 – 9999	13: N or 23: NNNN	Di 3 input indication or Qi 3 accumulated count indication
14	▲ ❄	0, 1 or 0 – 9999	14: N or 24: NNNN	Di 4 input indication or Qi 4 accumulated count indication
15	▲ ❄	0, 1 or 0 – 9999	15: N or 25: NNNN	Di 5 input indication or Qi 5 accumulated count indication
16	▲ ❄	0, 1 or 0 – 9999	16: N or 26: NNNN	Di 6 input indication or Qi 6 accumulated count indication
17	▲ ❄	-15.00 – 115.00 %	31: NNN.NN	QA 1 momentary value indication
18	▲ ❄	-15.00 – 115.00 %	32: NNN.NN	QA 2 momentary value indication
19	▲ ❄	-15.00 – 115.00 %	33: NNN.NN	QA 3 momentary value indication
20	▲ ❄	-15.00 – 115.00 %	34: NNN.NN	QA 4 momentary value indication
21	▲ ❄	-15.00 – 115.00 %	35: NNN.NN	QA 5 momentary value indication
22	▲ ❄	-15.00 – 115.00 %	36: NNN.NN	QA 6 momentary value indication
DISCRETE OUTPUT INDICATION				
23	▲ ❄	0, 1	01: N	Do 1 output indication
24	▲ ❄	0, 1	02: N	Do 2 output indication
25	▲ ❄	0, 1	03: N	Do 3 output indication
26	▲ ❄	0, 1	04: N	Do 4 output indication
27	▲ ❄	0, 1	05: N	Do 5 output indication
28	▲ ❄	0, 1	06: N	RUN contact output forced OFF (1: OFF)
PULSE INPUT SETTING				
★ 31	▲		PD: NNNNN	Di/Pi selection (0 = Di, 1 = Pi) (10^0 : Di 1, 10^1 : Di 2, 10^2 : Di 3, 10^3 : Di 4, 10^4 : Di 5) (Remark 1) Di 6 is specified in ITEM 52
★ 32	▲	1-16	KR: NN	Pi moving average sample number for momentary value conversion (QA 1 – QA 5)
★ 33	▲	1, 0, -1, -2, -3	D1: -1	Qi 1 power-law scaling (10's power 1: x 10, 0: x 1, -1: x 0.1, -2: x 0.01, -3: x 0.001)
★ 34	▲	0.0000 – 6.4000	S1: N.NNNN	Qi 1 scaling factor
★ 35	▲	0.00 – 10000.00	K1: NNNNN.NN	QA 1 momentary value conversion factor (number of pulses per second at 100% momentary value input)
★ 36	▲	1, 0, -1, -2, -3	D2: -1	Qi 2 power-law scaling (10's power 1: x 10, 0: x 1, -1: x 0.1, -2: x 0.01, -3: x 0.001)
★ 37	▲	0.0000 – 6.4000	S2: N.NNNN	Qi 2 scaling factor
★ 38	▲	0.00 – 10000.00	K2: NNNNN.NN	QA 2 momentary value conversion factor (number of pulses per second at 100% momentary value input)
★ 39	▲	1, 0, -1, -2, -3	D3: -1	Qi 3 power-law scaling (10's power 1: x 10, 0: x 1, -1: x 0.1, -2: x 0.01, -3: x 0.001)
★ 40	▲	0.0000 – 6.4000	S3: N.NNNN	Qi 3 scaling factor
★ 41	▲	0.00 – 10000.00	K3: NNNNN.NN	QA 3 momentary value conversion factor (number of pulses per second at 100% momentary value input)

ITEM	MDFY	DATA INPUT	DISPLAY (e.g.)	CONTENTS
★ 42	▲	1, 0, -1, -2, -3	D4: -1	Qi 4 power-law scaling (10's power 1: x 10, 0: x 1, -1: x 0.1, -2: x 0.01, -3: x 0.001)
★ 43	▲	0.0000 – 6.4000	S4: N.NNNN	Qi 4 scaling factor
★ 44	▲	0.00 – 10000.00	K4: NNNNN.NN	QA 4 momentary value conversion factor (number of pulses per second at 100% momentary value input)
★ 45	▲	1, 0, -1, -2, -3	D5: -1	Qi 5 power-law scaling (10's power 1: x 10, 0: x 1, -1: x 0.1, -2: x 0.01, -3: x 0.001)
★ 46	▲	0.0000 – 6.4000	S5: N.NNNN	Qi 5 scaling factor
★ 47	▲	0.00 – 10000.00	K5: NNNNN.NN	QA 5 momentary value conversion factor (number of pulses per second at 100% momentary value input)
★ 48	▲	1, 0, -1, -2, -3	D6: -1	Qi 6 power-law scaling (10's power 1: x 10, 0: x 1, -1: x 0.1, -2: x 0.01, -3: x 0.001)
★ 49	▲	0.0000 – 6.4000	S6: N.NNNN	Qi 6 scaling factor
★ 50	▲	0.00 – 10000.00	K6: NNNNN.NN	QA 6 momentary value conversion factor (number of pulses per second at 100% momentary value input)
DISCRETE OUTPUT SETTING				
★ 51	▲	0, 1	DM: N	Abnormality contact output mode (0: Normal, 1: All contact outputs OFF at RUN contact OFF)
HIGH SPEED PULSE INPUT SETTING				
★ 52	▲	0, 1	PD6: N	Di/Pi selection (0: Di 6, 1: Pi 6) SC 1.40

Remark 1: ITEM 31: Di/Pi selection

Pulse outputs become undefined when 'Di' is selected; while discrete outputs become undefined when 'Pi' is selected.

SC210W Field Terminal

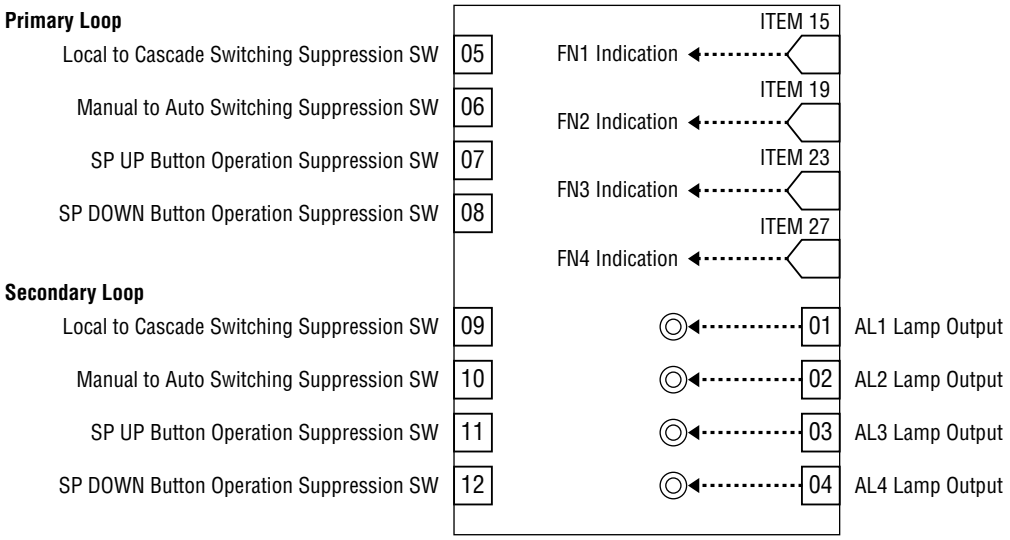

GROUP [01] ★: Setting data

ITEM	MDFY	DATA INPUT	DISPLAY (e.g.)	CONTENTS
01	●	(always modifiable)		■ MAINTENANCE SWITCH (lock command) Same mode for Extension Field Terminal 1 and 2
		0	MT: 0	MONITOR mode: data monitoring only
		1	MT: 1	PROGRAM mode: "▲" marked data modifiable
		S	MT: S	SIMULATION mode: "❄" marked data modifiable
02	IND	No input	ER: NN	Error indication (00: normal, 01 – 90: error) Extension Field Terminal 1 and 2 included
10	**IND**	**11**	**MD: 11**	**FIELD TERMINAL (model)**
INDICATION				
★ 11	▲	2, 3	GR: 2	Primary loop Group No. (valid after reset)
★ 12	▲	0, 1	M1: N	Primary MV operational range (0: ±115%, 1: -15 – +115%)
★ 13	▲	0, 1	M2: N	Secondary MV operational range (0: ±115%, 1: -15 – +115%)
★ 15	▲	GGNN	1F: 3121	FN1 connection terminal for indication GG: Group No. NN: terminal No.
★ 16	▲	±32000	1H: 15000	FN1 upper range (in engineering unit)
★ 17	▲	±32000	1L: 0	FN1 lower range (in engineering unit)
★ 18	▲	0, 1, 2, 3, 4, 5	1D: 1	FN1 decimal point position (from rightmost digit)
★ 19	▲	GGNN	2F: GGNN	FN2 connection terminal for indication GG: Group No. NN: terminal No.
★ 20	▲	±32000	2H: NNNNN	FN2 upper range (in engineering unit)
★ 21	▲	±32000	2L: NNNNN	FN2 lower range (in engineering unit)
★ 22	▲	0, 1, 2, 3, 4, 5	2D: N	FN2 decimal point position (from rightmost digit)
★ 23	▲	GGNN	3F: GGNN	FN3 connection terminal for indication GG: Group No. NN: terminal No.
★ 24	▲	±32000	3H: NNNNN	FN3 upper range (in engineering unit)
★ 25	▲	±32000	3L: NNNNN	FN3 lower range (in engineering unit)
★ 26	▲	0, 1, 2, 3, 4, 5	3D: N	FN3 decimal point position (from rightmost digit)
★ 27	▲	GGNN	4F: GGNN	FN4 connection terminal for indication GG: Group No. NN: terminal No.
★ 28	▲	±32000	4H: NNNNN	FN4 upper range (in engineering unit)
★ 29	▲	±32000	4L: NNNNN	FN4 lower range (in engineering unit)
★ 30	▲	0, 1, 2, 3, 4, 5	4D: N	FN4 decimal point position (from rightmost digit)

ITEM	MDFY	DATA INPUT	DISPLAY (e.g.)	CONTENTS
★ 31	▲	alphanumeric	T1: XXX...X	FN1 tag name (max. 10 characters)
★ 32	▲	alphanumeric	T2: XXX...X	FN2 tag name (max. 10 characters)
★ 33	▲	alphanumeric	T3: XXX...X	FN3 tag name (max. 10 characters)
★ 34	▲	alphanumeric	T4: XXX...X	FN4 tag name (max. 10 characters)
★ 35	▲	alphanumeric	U1: XXX...X	FN1 engineering unit (max. 8 characters)
★ 36	▲	alphanumeric	U2: XXX...X	FN2 engineering unit (max. 8 characters)
★ 37	▲	alphanumeric	U3: XXX...X	FN3 engineering unit (max. 8 characters)
★ 38	▲	alphanumeric	U4: XXX...X	FN4 engineering unit (max. 8 characters)
39	▲ ❄	0, 1	01: N	AL1 lamp output
40	▲ ❄	0, 1	02: N	AL2 lamp output
41	▲ ❄	0, 1	03: N	AL3 lamp output
42	▲ ❄	0, 1	04: N	AL4 lamp output
★ 43	▲	alphanumeric	L1: XXXX	AL1 comment (max. 4 characters)
★ 44	▲	alphanumeric	L2: XXXX	AL2 comment (max. 4 characters)
★ 45	▲	alphanumeric	L3: XXXX	AL3 comment (max. 4 characters)
★ 46	▲	alphanumeric	L4: XXXX	AL4 comment (max. 4 characters)
CONTROL (Remark 1)				
Primary Loop				
51	▲ ❄	0, 1	05: N	Local to Cascade switching suppress. SW (0: permit, 1: prohibit)
52	▲ ❄	0, 1	06: N	Manual to Auto switching suppress. SW (0: permit, 1: prohibit)
53	▲ ❄	0, 1	07: N	SP UP button operation suppress. SW (0: permit, 1: prohibit)
54	▲ ❄	0, 1	08: N	SP DOWN button operation suppress. SW (0: permit, 1: prohibit)
Secondary Loop				
55	▲ ❄	0, 1	09: N	Local to Cascade switching suppress. SW (0: permit, 1: prohibit)
56	▲ ❄	0, 1	10: N	Manual to Auto switching suppress. SW (0: permit, 1: prohibit)
57	▲ ❄	0, 1	11: N	SP UP button operation suppress. SW (0: permit, 1: prohibit)
58	▲ ❄	0, 1	12: N	SP DOWN button operation suppress. SW (0: permit, 1: prohibit)
Common Items				
61	▲	0, 1	21: 0	SP UP button operation status (0: OFF, 1: ON)
62	▲	0, 1	22: 0	SP DOWN button operation status (0: OFF, 1: ON)
63	▲	0, 1	23: 0	MV UP button operation status (0: OFF, 1: ON)
64	▲	0, 1	24: 0	MV DOWN button operation status (0: OFF, 1: ON)
★ 71	▲	10 – 100 s/100%	ST: 40	Time of holding SP UP or DOWN button
★ 72	▲	10 – 100 s/100%	ST: 40	Time of holding MV UP or DOWN button

Remark 1: Control by a host device connected via Modbus prevails the local setting.
Remark 2: ITEM 61 – 64: Please perform button operations with two times more than computation cycle.
Remark 3: ITEM 61 – 64: Obtains button operation status regardless of screen functions such as A/M and C/L.

SC210W Extension Field Terminal 1

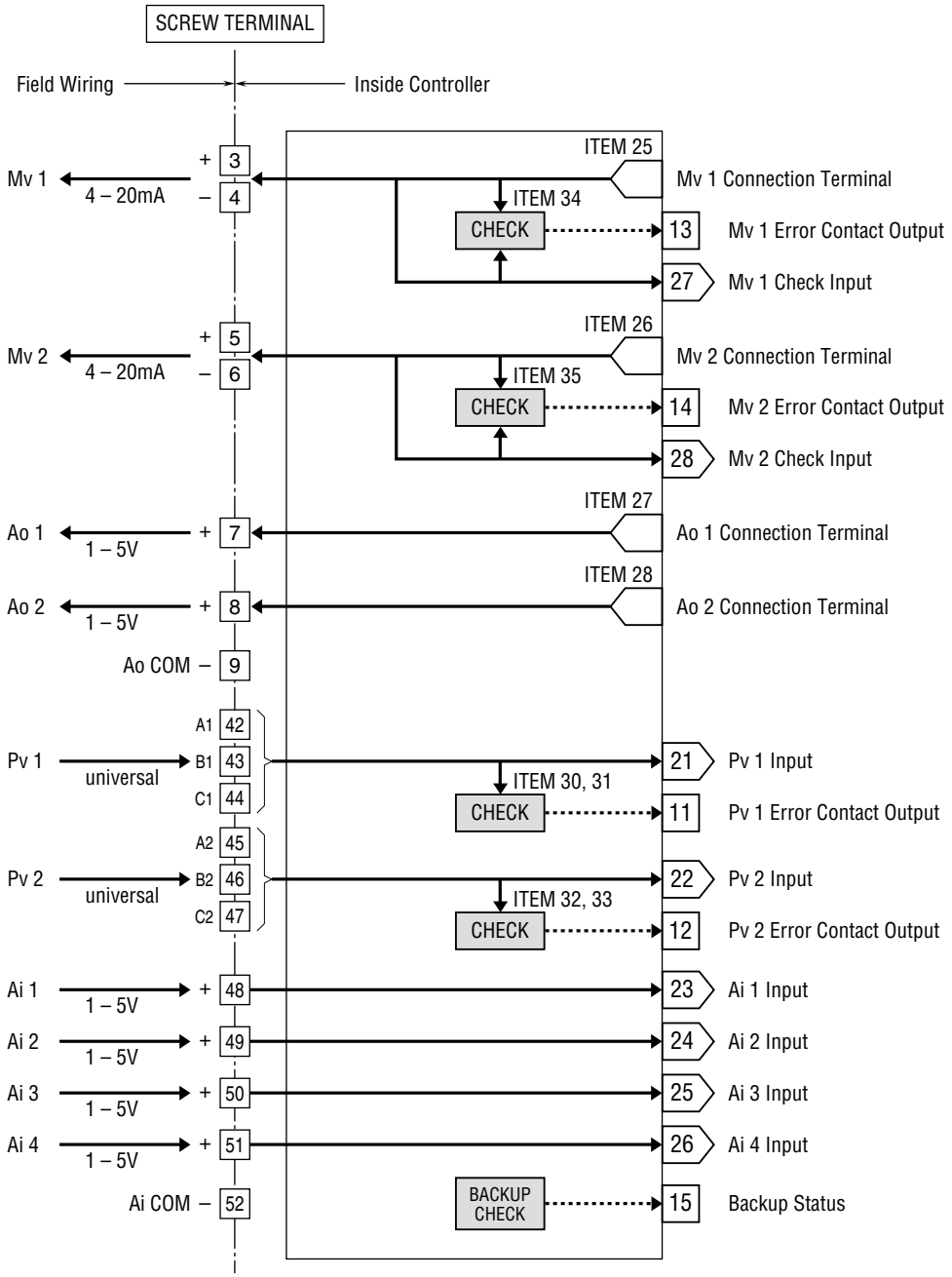

ITEM 02 has no error indication. It is indicated in GROUP 01 (Field Terminal).

GROUP [04] ★: Setting data

ITEM	MDFY	DATA INPUT	DISPLAY (e.g.)	CONTENTS
01	●	(always modifiable)		■ MAINTENANCE SWITCH (lock command) Same mode for Extension Field Terminal 1 and 2
		0	MT: 0	MONITOR mode: data monitoring only
		1	MT: 1	PROGRAM mode: "▲" marked data modifiable
		S	MT: S	SIMULATION mode: "❄" marked data modifiable
10	**IND**	**12**	**MD: 12**	**EXTENSION FIELD TERMINAL 1 (model)**
ANALOG INPUT INDICATION				
11	▲ ❄	-15.00 – 115.00 %	21: NNN.NN	Pv 1 input
12	▲ ❄	-15.00 – 115.00 %	22: NNN.NN	Pv 2 input
13	▲ ❄	-15.00 – 115.00 %	23: NNN.NN	Ai 1 input
14	▲ ❄	-15.00 – 115.00 %	24: NNN.NN	Ai 2 input
15	▲ ❄	-15.00 – 115.00 %	25: NNN.NN	Ai 3 input
16	▲ ❄	-15.00 – 115.00 %	26: NNN.NN	Ai 4 input
17	▲ ❄	-15.00 – 115.00 %	27: NNN.NN	Mv 1 check input
18	▲ ❄	-15.00 – 115.00 %	28: NNN.NN	Mv 2 check input
19	▲ ❄	±320.00Unit	29: NNN.NNUnit	Pv 1 input in engineering unit value
20	▲ ❄	±320.00Unit	30: NNN.NNUnit	Pv 2 input in engineering unit value
ANALOG OUTPUT INDICATION				
21	▲	-15.00 – 115.00 %	MV1: NNN.NN	Mv 1 output
22	▲	-15.00 – 115.00 %	MV2: NNN.NN	Mv 2 output
23	▲	-15.00 – 115.00 %	AO1: NNN.NN	Ao 1 output
24	▲	-15.00 – 115.00 %	AO2: NNN.NN	Ao 2 output
ANALOG OUTPUT CONNECTION TERMINAL				
★ 25	▲	GGNN	M1#: 0225	Mv 1 connection terminal (error if not connected) GG: Group No. NN : terminal No.
★ 26	▲	GGNN	M2#: 0225	Mv 2 connection terminal (error if not connected) GG: Group No. NN : terminal No.
★ 27	▲	GGNN	A1#: 0225	Ao 1 connection terminal (error if not connected) GG: Group No. NN : terminal No.
★ 28	▲	GGNN	A2#: 0225	Ao 2 connection terminal (error if not connected) GG: Group No. NN : terminal No.
PV / MV SETTING				
★ 30	▲	-15.00 – 115.00 %	PH1: NNN.NN	Pv 1 high alarm setpoint (for error judgment)
★ 31	▲	-15.00 – 115.00 %	PL1: NNN.NN	Pv 1 low alarm setpoint (for error judgment)
★ 32	▲	-15.00 – 115.00 %	PH2: NNN.NN	Pv 2 high alarm setpoint (for error judgment)
★ 33	▲	-15.00 – 115.00 %	PL2: NNN.NN	Pv 2 low alarm setpoint (for error judgment)
★ 34	▲	0.00 – 115.00 %	ML1: NNN.NN	Mv 1 deviation alarm setpoint (for error judgment)
★ 35	▲	0.00 – 115.00 %	ML2: NNN.NN	Mv 2 deviation alarm setpoint (for error judgment)
★ 36	▲	MM	TP1: MM	Pv 1 input type [MM: input type No.] 0:-10-10 V, 1: -1-1 V, 2: 0-10 V, 3: 1-5 V, 4: 0-1 V, 5: 4-20 mA 6: K, 7: E, 8: J, 9: T, 10: B, 11: R 12: S, 13: C, 14: N, 15: U, 16: L, 17: P, 18: PR 19: Pt100 (JIS '97, IEC), 20: Pt100 (JIS '89), 21: JPt100 (JIS '89), 22: Pt50 (JIS '81), 23: Ni100, 24: MS, 25: DS (Set ITEM37...39 for Pv 1 input type 6...23)
★ 37	▲	-272.0 – 3000.0	HT1: NNNN.N	Pv 1 upper range temperature
★ 38	▲	-272.0 – 3000.0	LT1: NNNN.N	Pv 1 lower range temperature
★ 39	▲	0, 1	CJ1: N	Pv 1 cold junction compensation (0: Without, 1: With)

ITEM	MDFY	DATA INPUT	DISPLAY (e.g.)	CONTENTS
★ 40	▲	MM	TP2: MM	Pv 2 input type [MM: input type No.] 12: S 19: Pt100 (JIS '97, IEC) 0:-10-10 V 6: K 13: C 20: Pt100 (JIS '89) 1: -1-1 V 7: E 14: N 21: JPt100 (JIS '89) 2: 0-10 V 8: J 15: U 22: Pt50 (JIS '81) 3: 1-5 V 9: T 16: L 23: Ni100 4: 0-1 V 10: B 17: P 24: MS 5: 4-20 mA 11: R 18: PR 25: DS (Set ITEM41...43 for Pv 1 input type 6...23)
★ 41	▲	-272.0 – 3000.0	HT2: NNNN.N	Pv 2 upper range temperature
★ 42	▲	-272.0 – 3000.0	LT2: NNNN.N	Pv 2 lower range temperature
★ 43	▲	0, 1	CJ2: N	Pv 2 cold junction compensation (0: without, 1: with)
44	▲ ❄	0, 1	11: N	Pv 1 error contact output
45	▲ ❄	0, 1	12: N	Pv 2 error contact output
46	▲ ❄	0, 1	13: N	Mv 1 error contact output
47	▲ ❄	0, 1	14: N	Mv 2 error contact output
ANALOG I/O ZERO/SPAN ADJUSTMENTS				
★ 50	▲	±115.00 %	PZ1: 0.00	Pv 1 zero adjustment (zero bias)
★ 51	▲	±3.2000	PS1: 1.0000	Pv 1 span adjustment (gain)
★ 52	▲	±115.00 %	PZ2: 0.00	Pv 2 zero adjustment (zero bias)
★ 53	▲	±3.2000	PS2: 1.0000	Pv 2 span adjustment (gain)
★ 54	▲	±115.00 %	MZ1: 0.00	Mv 1 zero adjustment (zero bias)
★ 55	▲	±3.2000	MS1: 1.0000	Mv 1 span adjustment (gain)
★ 56	▲	±115.00 %	MZ2: 0.00	Mv 2 zero adjustment (zero bias)
★ 57	▲	±3.2000	MS2: 1.0000	Mv 2 span adjustment (gain)
★ 58	▲	±115.00 %	IZ1: 0.00	Ai 1 zero adjustment (zero bias)
★ 59	▲	±3.2000	IS1: 1.0000	Ai 1 span adjustment (gain)
★ 60	▲	±115.00 %	IZ2: 0.00	Ai 2 zero adjustment (zero bias)
★ 61	▲	±3.2000	IS2: 1.0000	Ai 2 span adjustment (gain)
★ 62	▲	±115.00 %	IZ3: 0.00	Ai 3 zero adjustment (zero bias)
★ 63	▲	±3.2000	IS3: 1.0000	Ai 3 span adjustment (gain)
★ 64	▲	±115.00 %	IZ4: 0.00	Ai 4 zero adjustment (zero bias)
★ 65	▲	±3.2000	IS4: 1.0000	Ai 4 span adjustment (gain)
★ 66	▲	±115.00 %	CZ1: 0.00	Mv 1 check input zero adjustment (zero bias)
★ 67	▲	±3.2000	CS1: 1.0000	Mv 1 check input span adjustment (gain)
★ 68	▲	±115.00 %	CZ2: 0.00	Mv 2 check input zero adjustment (zero bias)
★ 69	▲	±3.2000	CS2: 1.0000	Mv 2 check input span adjustment (gain)
★ 70	▲	±115.00 %	OZ1: 0.00	Ao 1 zero adjustment (zero bias)
★ 71	▲	±3.2000	OS1: 1.0000	Ao 1 span adjustment (gain)
★ 72	▲	±115.00 %	OZ2: 0.00	Ao 2 zero adjustment (zero bias)
★ 73	▲	±3.2000	OS2: 1.0000	Ao 2 span adjustment (gain)
BACKUP (Mv 2)				
80	▲	-15.00 – 115.00 %	MVB: NNN.NN	Manual loading MV
★ 81	▲	0, 1	BSW: NNN.NN	Automatic switching (0: disable, 1: enable)
★ 82	▲	0, 1	BMD: NNN.NN	Backup output mode (0: track back, 1: preset value)
★ 83	▲	0.00 – 115.00 %/s	BVL: NNN.NN	Output rate-of-change limit (0.00: no limit applied)
★ 84	▲	-15.00 – 115.00 %	BFV: NNN.NN	Preset value (applied with ITEM 82 DATA 1)
★ 85	▲	0, 1	BBL: N	Backup recovery mode (0: auto tracking, 1: manual tracking)
★ 86	▲	2, 3	BGR: N	Backup GROUP
87	▲	0, 1	15: N	Backup status (0: normal, 1: backup)

SC210W Extension Field Terminal 2

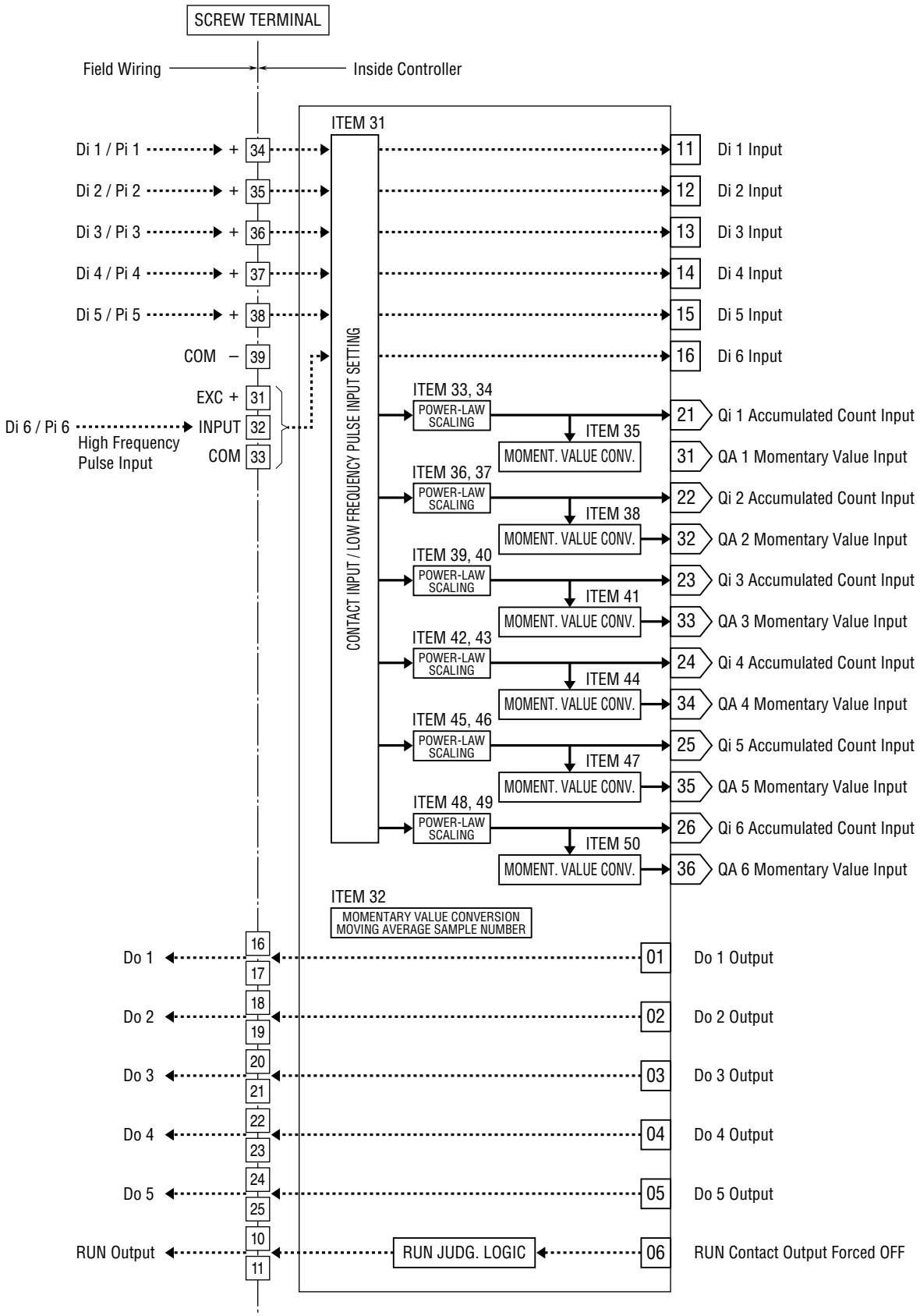

ITEM 02 has no error indication. It is indicated in GROUP 01 (Field Terminal).

GROUP [05] ★: Setting data

ITEM	MDFY	DATA INPUT	DISPLAY (e.g.)	CONTENTS
01	●	(always modifiable)		■ MAINTENANCE SWITCH (lock command) Same mode for Extension Field Terminal 1 and 2
		0	MT: 0	MONITOR mode: data monitoring only
		1	MT: 1	PROGRAM mode: "▲" marked data modifiable
		S	MT: S	SIMULATION mode: "❄" marked data modifiable
10	**IND**	**13**	**MD: 13**	**EXTENSION FIELD TERMINAL 2 (model)**
DISCRETE INPUT INDICATION				
11	▲ ❄	0, 1 or 0 – 9999	11: N or 21: NNNN	Di 1 input indication or Qi 1 accumulated count indication
12	▲ ❄	0, 1 or 0 – 9999	12: N or 22: NNNN	Di 2 input indication or Qi 2 accumulated count indication
13	▲ ❄	0, 1 or 0 – 9999	13: N or 23: NNNN	Di 3 input indication or Qi 3 accumulated count indication
14	▲ ❄	0, 1 or 0 – 9999	14: N or 24: NNNN	Di 4 input indication or Qi 4 accumulated count indication
15	▲ ❄	0, 1 or 0 – 9999	15: N or 25: NNNN	Di 5 input indication or Qi 5 accumulated count indication
16	▲ ❄	0, 1 or 0 – 9999	16: N or 26: NNNN	Di 6 input indication or Qi 6 accumulated count indication
17	▲ ❄	-15.00 – 115.00 %	31: NNN.NN	QA 1 momentary value indication
18	▲ ❄	-15.00 – 115.00 %	32: NNN.NN	QA 2 momentary value indication
19	▲ ❄	-15.00 – 115.00 %	33: NNN.NN	QA 3 momentary value indication
20	▲ ❄	-15.00 – 115.00 %	34: NNN.NN	QA 4 momentary value indication
21	▲ ❄	-15.00 – 115.00 %	35: NNN.NN	QA 5 momentary value indication
22	▲ ❄	-15.00 – 115.00 %	36: NNN.NN	QA 6 momentary value indication
DISCRETE OUTPUT INDICATION				
23	▲ ❄	0, 1	01: N	Do 1 output indication
24	▲ ❄	0, 1	02: N	Do 2 output indication
25	▲ ❄	0, 1	03: N	Do 3 output indication
26	▲ ❄	0, 1	04: N	Do 4 output indication
27	▲ ❄	0, 1	05: N	Do 5 output indication
28	▲ ❄	0, 1	06: N	RUN contact output forced OFF (1: OFF)
PULSE INPUT SETTING				
★ 31	▲		PD: NNNNN	Di/Pi selection (0 = Di, 1 = Pi) (10^0 : Di 1, 10^1 : Di 2, 10^2 : Di 3, 10^3 : Di 4, 10^4 : Di 5) (Remark 1) Di 6 is specified in ITEM 52
★ 32	▲	1-16	KR: NN	Pi moving average sample number for momentary value conversion
★ 33	▲	1, 0, -1, -2, -3	D1: -1	Qi 1 power-law scaling (10's power 1: x 10, 0: x 1, -1: x 0.1, -2: x 0.01, -3: x 0.001)
★ 34	▲	0.0000 – 6.4000	S1: N.NNNN	Qi 1 scaling factor
★ 35	▲	0.00 – 10000.00	K1: NNNNN.NN	QA 1 momentary value conversion factor (number of pulses per second at 100% momentary value input)
★ 36	▲	1, 0, -1, -2, -3	D2: -1	Qi 2 power-law scaling (10's power 1: x 10, 0: x 1, -1: x 0.1, -2: x 0.01, -3: x 0.001)
★ 37	▲	0.0000 – 6.4000	S2: N.NNNN	Qi 2 scaling factor
★ 38	▲	0.00 – 10000.00	K2: NNNNN.NN	QA 2 momentary value conversion factor (number of pulses per second at 100% momentary value input)
★ 39	▲	1, 0, -1, -2, -3	D3: -1	Qi 3 power-law scaling (10's power 1: x 10, 0: x 1, -1: x 0.1, -2: x 0.01, -3: x 0.001)
★ 40	▲	0.0000 – 6.4000	S3: N.NNNN	Qi 3 scaling factor
★ 41	▲	0.00 – 10000.00	K3: NNNNN.NN	QA 3 momentary value conversion factor (number of pulses per second at 100% momentary value input)

ITEM	MDFY	DATA INPUT	DISPLAY (e.g.)	CONTENTS
★ 42	▲	1, 0, -1, -2, -3	D4: -1	Qi 4 power-law scaling (10's power 1: x 10, 0: x 1, -1: x 0.1, -2: x 0.01, -3: x 0.001)
★ 43	▲	0.0000 – 6.4000	S4: N.NNNN	Qi 4 scaling factor
★ 44	▲	0.00 – 10000.00	K4: NNNNN.NN	QA 4 momentary value conversion factor (number of pulses per second at 100% momentary value input)
★ 45	▲	1, 0, -1, -2, -3	D5: -1	Qi 5 power-law scaling (10's power 1: x 10, 0: x 1, -1: x 0.1, -2: x 0.01, -3: x 0.001)
★ 46	▲	0.0000 – 6.4000	S5: N.NNNN	Qi 5 scaling factor
★ 47	▲	0.00 – 10000.00	K5: NNNNN.NN	QA 5 momentary value conversion factor (number of pulses per second at 100% momentary value input)
★ 48	▲	1, 0, -1, -2, -3	D6: -1	Qi 6 power-law scaling (10's power 1: x 10, 0: x 1, -1: x 0.1, -2: x 0.01, -3: x 0.001)
★ 49	▲	0.0000 – 6.4000	S6: N.NNNN	Qi 6 scaling factor
★ 50	▲	0.00 – 10000.00	K6: NNNNN.NN	QA 6 momentary value conversion factor (number of pulses per second at 100% momentary value input)
DISCRETE OUTPUT SETTING				
★ 51	▲	0, 1	DM: N	Abnormality contact output mode (0: Normal, 1: All contact outputs OFF at RUN contact OFF)
HIGH SPEED PULSE INPUT SETTING				
★ 52	▲	0, 1	PD6: N	Di/Pi selection (0: Di 6, 1: Pi 6)

Remark 1: ITEM 31: Di/Pi selection

Pulse outputs become undefined when 'Di' is selected; while discrete outputs become undefined when 'Pi' is selected.

SML-A4 Field Terminal

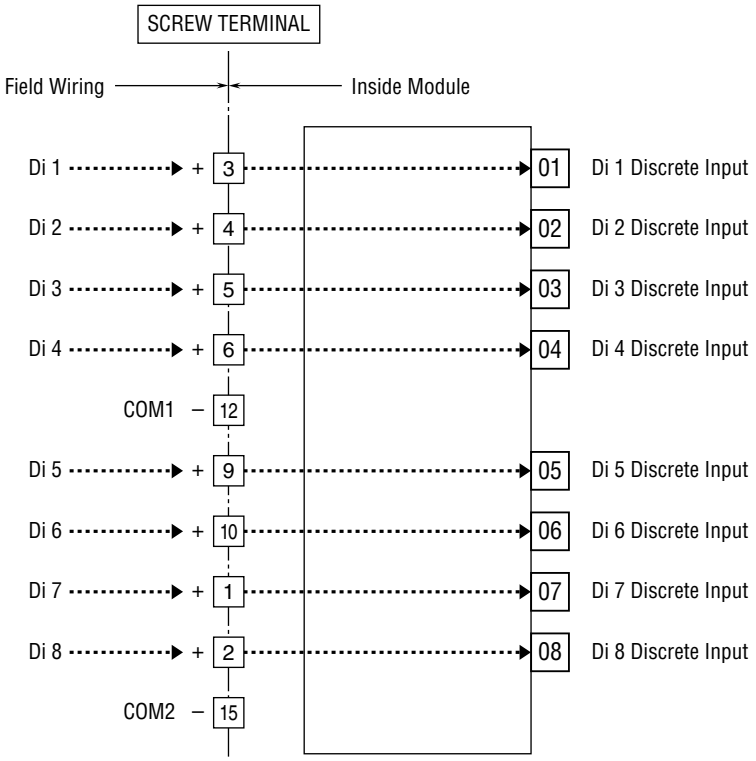

GROUP [01]

ITEM	MDFY	DATA INPUT	DISPLAY (e.g.)	CONTENTS
01	●	(always modifiable)		■ MAINTENANCE SWITCH (lock command)
		0	MT: 0	MONITOR mode: data monitoring only
		1	MT: 1	PROGRAM mode: "▲" marked data modifiable
		S	MT: S	SIMULATION mode: "❄" marked data modifiable
02	IND	No input	ER: NN	Error indication (00: normal, 01 – 90: error)
10	**IND**	**11**	**MD: 11**	**FIELD TERMINAL (model)**
DISCRETE INPUT INDICATION				
11	▲ ❄	0, 1	01: N	Di 1 discrete input
12	▲ ❄	0, 1	02: N	Di 2 :
13	▲ ❄	0, 1	03: N	Di 3 :
14	▲ ❄	0, 1	04: N	Di 4 :
15	▲ ❄	0, 1	05: N	Di 5 :
16	▲ ❄	0, 1	06: N	Di 6 :
17	▲ ❄	0, 1	07: N	Di 7 :
18	▲ ❄	0, 1	08: N	Di 8 :

SML-C7, -C8 Field Terminal

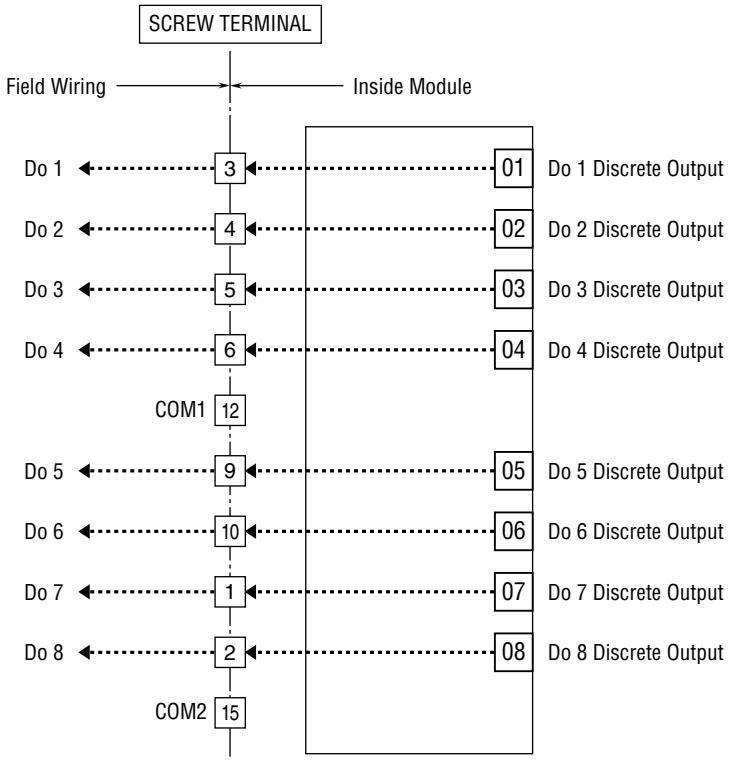

GROUP [01]

ITEM	MDFY	DATA INPUT	DISPLAY (e.g.)	CONTENTS
01	●	(always modifiable)		■ MAINTENANCE SWITCH (lock command)
		0	MT: 0	MONITOR mode: data monitoring only
		1	MT: 1	PROGRAM mode: "▲" marked data modifiable
02	IND	No input	ER: NN	Error indication (00: normal, 01 – 90: error)
10	**IND**	**11**	**MD: 11**	**FIELD TERMINAL (model)**
DISCRETE OUTPUT INDICATION				
11	▲	0, 1	01: N	Do 1 discrete output
12	▲	0, 1	02: N	Do 2 :
13	▲	0, 1	03: N	Do 3 :
14	▲	0, 1	04: N	Do 4 :
15	▲	0, 1	05: N	Do 5 :
16	▲	0, 1	06: N	Do 6 :
17	▲	0, 1	07: N	Do 7 :
18	▲	0, 1	08: N	Do 8 :

SML-E5 Field Terminal

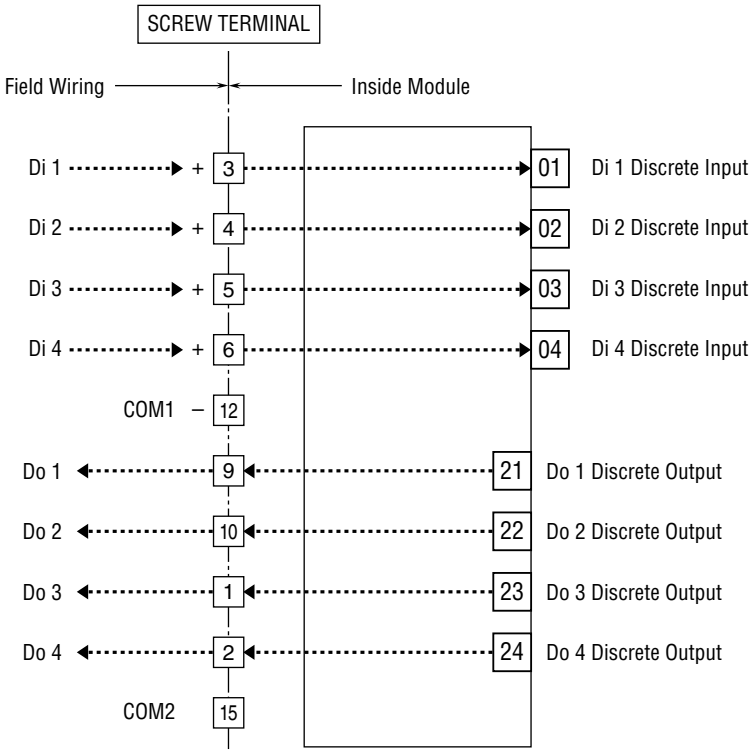

GROUP [01]

ITEM	MDFY	DATA INPUT	DISPLAY (e.g.)	CONTENTS
01	●	(always modifiable)		■ MAINTENANCE SWITCH (lock command)
		0	MT: 0	MONITOR mode: data monitoring only
		1	MT: 1	PROGRAM mode: "▲" marked data modifiable
		S	MT: S	SIMULATION mode: "❄" marked data modifiable
02	IND	No input	ER: NN	Error indication (00: normal, 01 – 90: error)
10	**IND**	**11**	**MD: 11**	**FIELD TERMINAL (model)**
DISCRETE INPUT INDICATION				
11	▲❄	0, 1	01: N	Di 1 discrete input
12	▲❄	0, 1	02: N	Di 2 :
13	▲❄	0, 1	03: N	Di 3 :
14	▲❄	0, 1	04: N	Di 4 :
DISCRETE OUTPUT INDICATION				
31	▲	0, 1	21: N	Do 1 discrete output
32	▲	0, 1	22: N	Do 2 :
33	▲	0, 1	23: N	Do 3 :
34	▲	0, 1	24: N	Do 4 :

SML-G3 Field Terminal

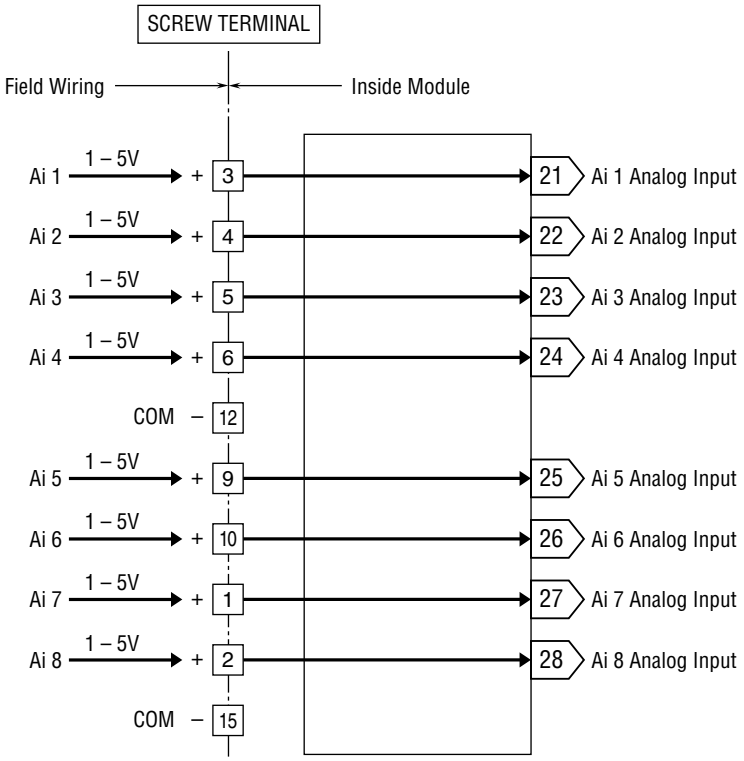

GROUP [01] ★: Setting data

ITEM	MDFY	DATA INPUT	DISPLAY (e.g.)	CONTENTS
01	●	(always modifiable)		■ MAINTENANCE SWITCH (lock command)
		0	MT: 0	MONITOR mode: data monitoring only
		1	MT: 1	PROGRAM mode: "▲" marked data modifiable
		S	MT: S	SIMULATION mode: "❄" marked data modifiable
02	IND	No input	ER: NN	Error indication (00: normal, 01 – 90: error)
10	**IND**	**11**	**MD: 11**	**FIELD TERMINAL (model)**
ANALOG INPUT INDICATION				
21	▲ ❄	-15.00 – 115.00 %	21: NNN.NN	Ai 1 input indication
22	▲ ❄	:	22: :	Ai 2 :
23	▲ ❄	:	23: :	Ai 3 :
24	▲ ❄	:	24: :	Ai 4 :
25	▲ ❄	:	25: :	Ai 5 :
26	▲ ❄	:	26: :	Ai 6 :
27	▲ ❄	:	27: :	Ai 7 :
28	▲ ❄	:	28: :	Ai 8 :
ANALOG INPUT ZERO/SPAN ADJUSTMENTS				
★ 31	▲	±115.00 %	1Z: 0.00	Ai 1 zero adjustment (zero bias)
★ 32	▲	±3.2000	1S: 1.0000	Ai 1 span adjustment (gain)
★ 33	▲	±115.00 %	2Z: 0.00	Ai 2 zero
★ 34	▲	±3.2000	2S: 1.0000	Ai 2 span
★ 35	▲	±115.00 %	3Z: 0.00	Ai 3 zero
★ 36	▲	±3.2000	3S: 1.0000	Ai 3 span
★ 37	▲	±115.00 %	4Z: 0.00	Ai 4 zero
★ 38	▲	±3.2000	4S: 1.0000	Ai 4 span
★ 39	▲	±115.00 %	5Z: 0.00	Ai 5 zero
★ 40	▲	±3.2000	5S: 1.0000	Ai 5 span
★ 41	▲	±115.00 %	6Z: 0.00	Ai 6 zero
★ 42	▲	±3.2000	6S: 1.0000	Ai 6 span
★ 43	▲	±115.00 %	7Z: 0.00	Ai 7 zero
★ 44	▲	±3.2000	7S: 1.0000	Ai 7 span
★ 45	▲	±115.00 %	8Z: 0.00	Ai 8 zero
★ 46	▲	±3.2000	8S: 1.0000	Ai 8 span

SML-G4 Field Terminal

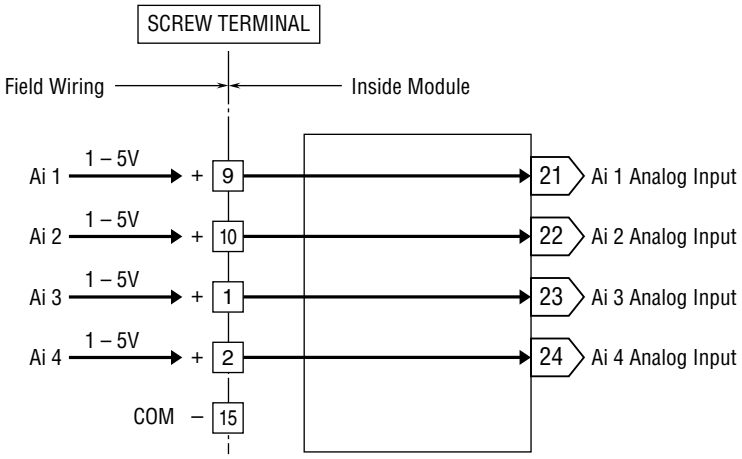

GROUP [01] ★: Setting data

ITEM	MDFY	DATA INPUT	DISPLAY (e.g.)	CONTENTS
01	●	(always modifiable)		■ MAINTENANCE SWITCH (lock command)
		0	MT: 0	MONITOR mode: data monitoring only
		1	MT: 1	PROGRAM mode: "▲" marked data modifiable
		S	MT: S	SIMULATION mode: "❄" marked data modifiable
02	IND	No input	ER: NN	Error indication (00: normal, 01 – 90: error)
10	**IND**	**11**	**MD: 11**	**FIELD TERMINAL (model)**
ANALOG INPUT INDICATION				
21	▲ ❄	-15.00 – 115.00 %	21: NNN.NN	Ai 1 input indication
22	▲ ❄	:	22: :	Ai 2 :
23	▲ ❄	:	23: :	Ai 3 :
24	▲ ❄	:	24: :	Ai 4 :
ANALOG INPUT ZERO/SPAN ADJUSTMENTS				
★ 31	▲	±115.00 %	1Z: 0.00	Ai 1 zero adjustment (zero bias)
★ 32	▲	±3.2000	1S: 1.0000	Ai 1 span adjustment (gain)
★ 33	▲	±115.00 %	2Z: 0.00	Ai 2 zero
★ 34	▲	±3.2000	2S: 1.0000	Ai 2 span
★ 35	▲	±115.00 %	3Z: 0.00	Ai 3 zero
★ 36	▲	±3.2000	3S: 1.0000	Ai 3 span
★ 37	▲	±115.00 %	4Z: 0.00	Ai 4 zero
★ 38	▲	±3.2000	4S: 1.0000	Ai 4 span

SML-M4 Field Terminal

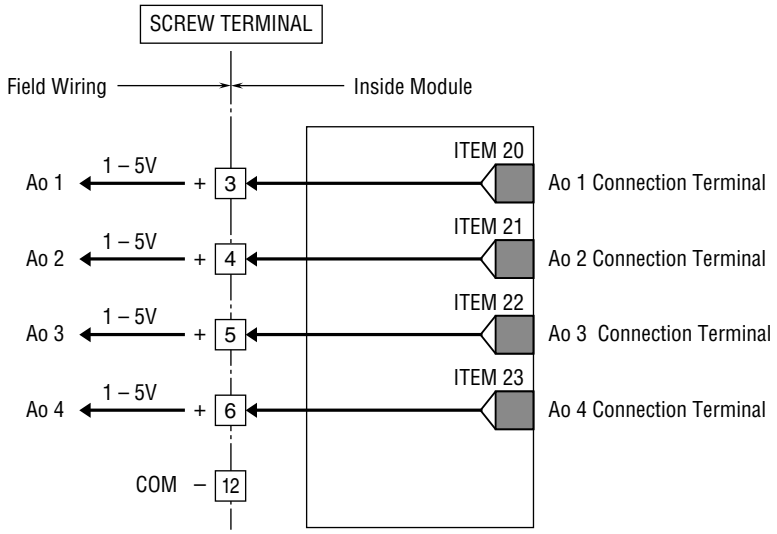

GROUP [01] ★: Setting data

ITEM	MDFY	DATA INPUT	DISPLAY (e.g.)	CONTENTS
01	●	(always modifiable)		■ MAINTENANCE SWITCH (lock command)
		0	MT: 0	MONITOR mode: data monitoring only
		1	MT: 1	PROGRAM mode: "▲" marked data modifiable
02	IND	No input	ER: NN	Error indication (00: normal, 01 – 90: error)
ANALOG OUTPUT INDICATION				
03	▲	-15.00 – 115.00 %	01: NNN.NN	Ao 1 output indication
04	▲	:	02: :	Ao 2 :
05	▲	:	03: :	Ao 3 :
06	▲	:	04: :	Ao 4 :
10	**IND**	**11**	**MD: 11**	**FIELD TERMINAL (model)**
ANALOG OUTPUT CONNECTION TERMINAL		GG: GROUP NO., NN: TERMINAL NO.		
★ 20	▲	GGNN	1#: 0225	Ao 1 connection terminal (error if not connected)
★ 21	▲	GGNN	2#: 1121	Ao 2 connection terminal (error if not connected)
★ 22	▲	GGNN	3#: 1122	Ao 3 connection terminal (error if not connected)
★ 23	▲	GGNN	4#: 1221	Ao 4 connection terminal (error if not connected)
ANALOG OUTPUT ZERO/SPAN ADJUSTMENTS				
★ 36	▲	±115.00 %	1Z: 0.00	Ao 1 zero adjustment (zero bias)
★ 37	▲	±3.2000	1S: 1.0000	Ao 1 span adjustment (gain)
★ 38	▲	±115.00 %	2Z: 0.00	Ao 2 zero
★ 39	▲	±3.2000	2S: 1.0000	Ao 2 span
★ 40	▲	±115.00 %	3Z: 0.00	Ao 3 zero
★ 41	▲	±3.2000	3S: 1.0000	Ao 3 span
★ 42	▲	±115.00 %	4Z: 0.00	Ao 4 zero
★ 43	▲	±3.2000	4S: 1.0000	Ao 4 span

SML-P4 Field Terminal

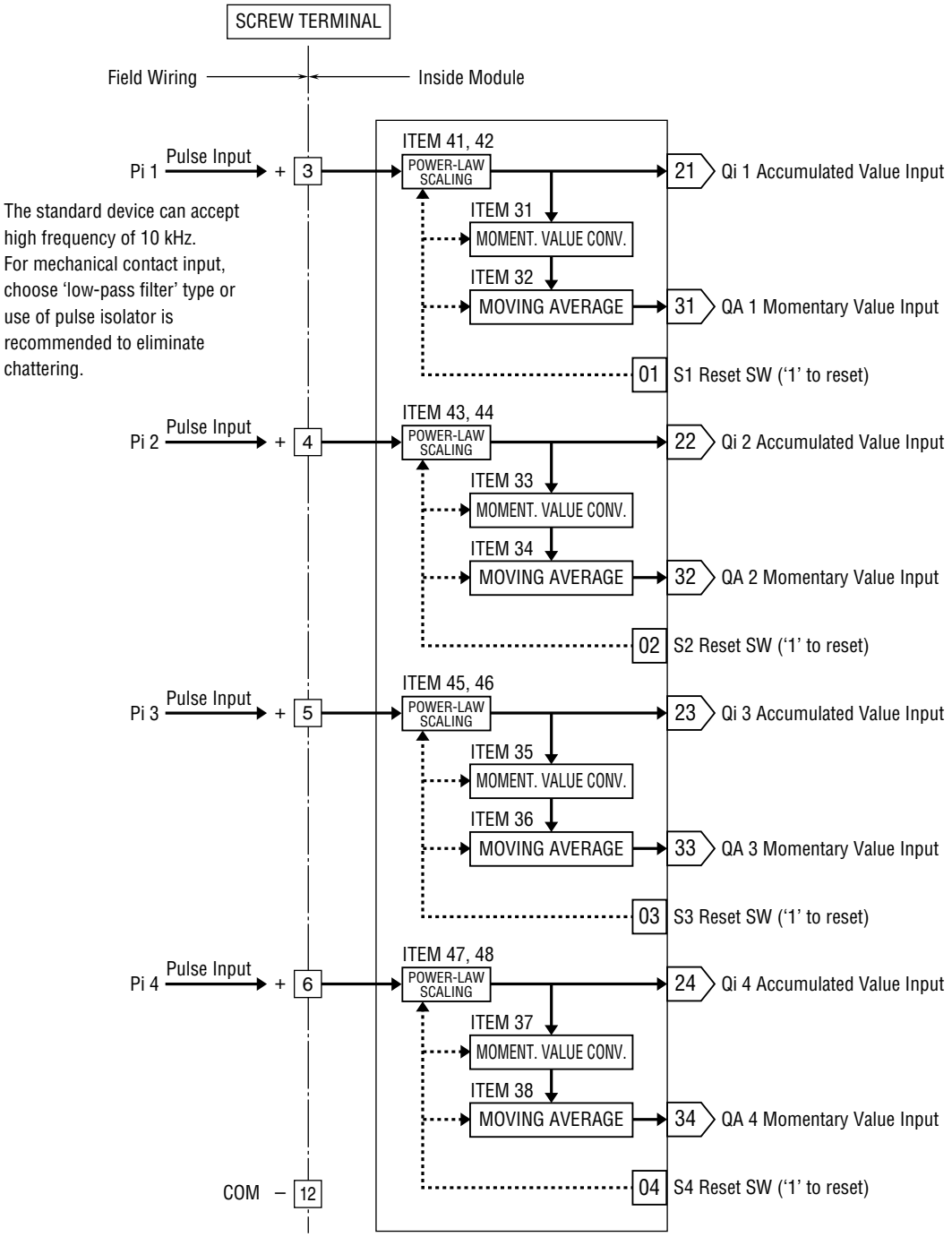

GROUP [01] ★: Setting data

ITEM	MDFY	DATA INPUT	DISPLAY (e.g.)	CONTENTS
01	●	(always modifiable)		■ MAINTENANCE SWITCH (lock command)
		0	MT: 0	MONITOR mode: data monitoring only
		1	MT: 1	PROGRAM mode: "▲" marked data modifiable
		S	MT: S	SIMULATION mode: "❄" marked data modifiable
02	IND	No input	ER: NN	Error indication (00: normal, 01 – 90: error)
10	**IND**	**11**	**MD: 11**	**FIELD TERMINAL (model)**
MOMENTARY VALUE INPUT INDICATION				
11	▲❄	-15.00 – 115.00 %	31: NNN.NN	QA 1 momentary value input indication
12	▲❄	:	32: :	QA 2 :
13	▲❄	:	33: :	QA 3 :
14	▲❄	:	34: :	QA 4 :
ACCUMULATED VALUE INPUT INDICATION				
21	▲❄	0 – 9999	21: NNNN	Qi 1 accumulated value input indication (unit: count)
22	▲❄	:	22: :	Qi 2 :
23	▲❄	:	23: :	Qi 3 :
24	▲❄	:	24: :	Qi 4 :
MOMENTARY VALUE CONVERSION FACTOR (number of pulses per second at 100% momentary value input)				
★ 31	▲	0.00 – 10000.00	K1: NNNNN.NN	QA 1 conversion factor
★ 32	▲	1 – 16	V1: 1	QA 1 moving average sample number
★ 33	▲	0.00 – 10000.00	K2: NNNNN.NN	QA 2 conversion factor
★ 34	▲	1 – 16	V2: 1	QA 2 moving average sample number
★ 35	▲	0.00 – 10000.00	K3: NNNNN.NN	QA 3 conversion factor
★ 36	▲	1 – 16	V3: 1	QA 3 moving average sample number
★ 37	▲	0.00 – 10000.00	K4: NNNNN.NN	QA 4 conversion factor
★ 38	▲	1 – 16	V4: 1	QA 4 moving average sample number
ACCUMULATED VALUE POWER-LAW SCALING (10's power 1: x 10, 0: x 1, -1: x 0.1, -2: x 0.01, -3: x 0.001)				
★ 41	▲	1, 0, -1, -2, -3	D1: -1	Qi 1 power-law scaling
★ 42	▲	1.0000 – 6.4000	S1: N.NNNN	Qi 1 scaling factor
★ 43	▲	1, 0, -1, -2, -3	D2: -1	Qi 2 power-law scaling
★ 44	▲	1.0000 – 6.4000	S2: N.NNNN	Qi 2 scaling factor
★ 45	▲	1, 0, -1, -2, -3	D3: -1	Qi 3 power-law scaling
★ 46	▲	1.0000 – 6.4000	S3: N.NNNN	Qi 3 scaling factor
★ 47	▲	1, 0, -1, -2, -3	D4: -1	Qi 4 power-law scaling
★ 48	▲	1.0000 – 6.4000	S4: N.NNNN	Qi 4 scaling factor
RESET INPUT				
51	▲❄	0, 1	01: N	S1 reset SW
52	▲❄	0, 1	02: N	S2 reset SW
53	▲❄	0, 1	03: N	S3 reset SW
54	▲❄	0, 1	04: N	S4 reset SW

SML-R2 Field Terminal

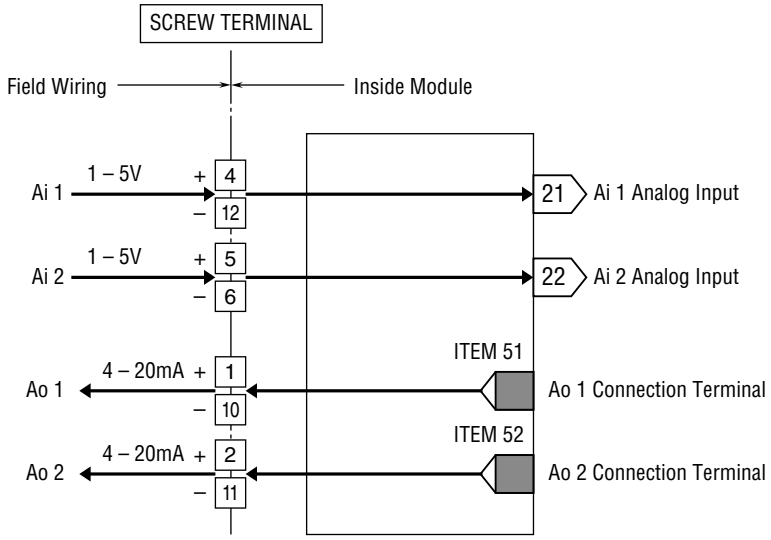

GROUP [01] ★: Setting data

ITEM	MDFY	DATA INPUT	DISPLAY (e.g.)	CONTENTS
01	●	(always modifiable)		■ MAINTENANCE SWITCH (lock command)
		0	MT: 0	MONITOR mode: data monitoring only
		1	MT: 1	PROGRAM mode: "▲" marked data modifiable
		S	MT: S	SIMULATION mode: "❄" marked data modifiable
02	IND	No input	ER: NN	Error indication (00: normal, 01 – 90: error)
10	**IND**	**11**	**MD: 11**	**FIELD TERMINAL (model)**
ANALOG INPUT INDICATION				
11	▲❄	-15.00 – 115.00 %	21: NNN.NN	Ai 1 input indication
12	▲❄	-15.00 – 115.00 %	22: NNN.NN	Ai 2 input indication
ANALOG INPUT ZERO/SPAN ADJUSTMENTS				
★ 21	▲	±115.00 %	1Z: 0.00	Ai 1 zero adjustment (zero bias)
★ 22	▲	±3.2000	1S: 1.0000	Ai 1 span adjustment (gain)
★ 23	▲	±115.00 %	2Z: 0.00	Ai 2 zero
★ 24	▲	±3.2000	2S: 1.0000	Ai 2 span
ANALOG OUTPUT INDICATION				
41	▲	-15.00 – 115.00 %	01: NNN.NN	Ao 1 output indication
42	▲	-15.00 – 115.00 %	02: NNN.NN	Ao 2 output indication
ANALOG OUTPUT CONNECTION TERMINAL		GG: GROUP NO., NN: TERMINAL NO.		
★ 51	▲	GGNN	1#: 0225	Ao 1 connection terminal (error if not connected)
★ 52	▲	GGNN	2#: 1121	Ao 2 connection terminal (error if not connected)
ANALOG OUTPUT ZERO/SPAN ADJUSTMENTS				
★ 61	▲	±115.00 %	1Z: 0.00	Ao 1 zero adjustment (zero bias)
★ 62	▲	±3.2000	1S: 1.0000	Ao 1 span adjustment (gain)
★ 63	▲	±115.00 %	2Z: 0.00	Ao 2 zero
★ 64	▲	±3.2000	2S: 1.0000	Ao 2 span

SML-R3 Field Terminal

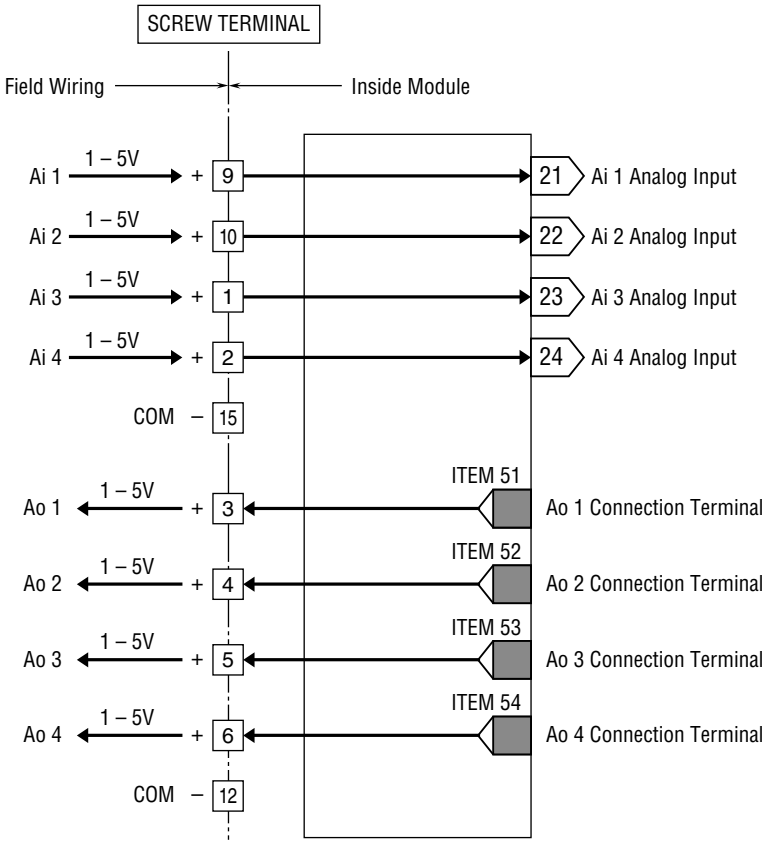

GROUP [01] ★: Setting data

ITEM	MDFY	DATA INPUT	DISPLAY (e.g.)	CONTENTS
01	●	(always modifiable)		■ MAINTENANCE SWITCH (lock command)
		0	MT: 0	MONITOR mode: data monitoring only
		1	MT: 1	PROGRAM mode: "▲" marked data modifiable
		S	MT: S	SIMULATION mode: "❄" marked data modifiable
02	IND	No input	ER: NN	Error indication (00: normal, 01 – 90: error)
10	**IND**	**11**	**MD: 11**	**FIELD TERMINAL (model)**
ANALOG INPUT INDICATION				
11	▲❄	-15.00 – 115.00 %	21: NNN.NN	Ai 1 input indication
12	▲❄	:	22: :	Ai 2 :
13	▲❄	:	23: :	Ai 3 :
14	▲❄	:	24: :	Ai 4 :
ANALOG INPUT ZERO/SPAN ADJUSTMENTS				
★ 21	▲	±115.00 %	1Z: 0.00	Ai 1 zero adjustment (zero bias)
★ 22	▲	±3.2000	1S: 1.0000	Ai 1 span adjustment (gain)
★ 23	▲	±115.00 %	2Z: 0.00	Ai 2 zero
★ 24	▲	±3.2000	2S: 1.0000	Ai 2 span
★ 25	▲	±115.00 %	3Z: 0.00	Ai 3 zero
★ 26	▲	±3.2000	3S: 1.0000	Ai 3 span
★ 27	▲	±115.00 %	4Z: 0.00	Ai 4 zero
★ 28	▲	±3.2000	4S: 1.0000	Ai 4 span
ANALOG OUTPUT INDICATION				
41	▲	-15.00 – 115.00 %	01: NNN.NN	Ao 1 output indication
42	▲	:	02: :	Ao 2 :
43	▲	:	03: :	Ao 3 :
44	▲	:	04: :	Ao 4 :
ANALOG OUTPUT CONNECTION TERMINAL		GG: GROUP NO., NN: TERMINAL NO.		
★ 51	▲	GGNN	1#: 0225	Ao 1 connection terminal (error if not connected)
★ 52	▲	GGNN	2#: 1121	Ao 2 connection terminal (error if not connected)
★ 53	▲	GGNN	3#: 1122	Ao 3 connection terminal (error if not connected)
★ 54	▲	GGNN	4#: 1221	Ao 4 connection terminal (error if not connected)
ANALOG OUTPUT ZERO/SPAN ADJUSTMENTS				
★ 61	▲	±115.00 %	1Z: 0.00	Ao 1 zero adjustment (zero bias)
★ 62	▲	±3.2000	1S: 1.0000	Ao 1 span adjustment (gain)
★ 63	▲	±115.00 %	2Z: 0.00	Ao 2 zero
★ 64	▲	±3.2000	2S: 1.0000	Ao 2 span
★ 65	▲	±115.00 %	3Z: 0.00	Ao 3 zero
★ 66	▲	±3.2000	3S: 1.0000	Ao 3 span
★ 67	▲	±115.00 %	4Z: 0.00	Ao 4 zero
★ 68	▲	±3.2000	4S: 1.0000	Ao 4 span

SML-S5 Field Terminal

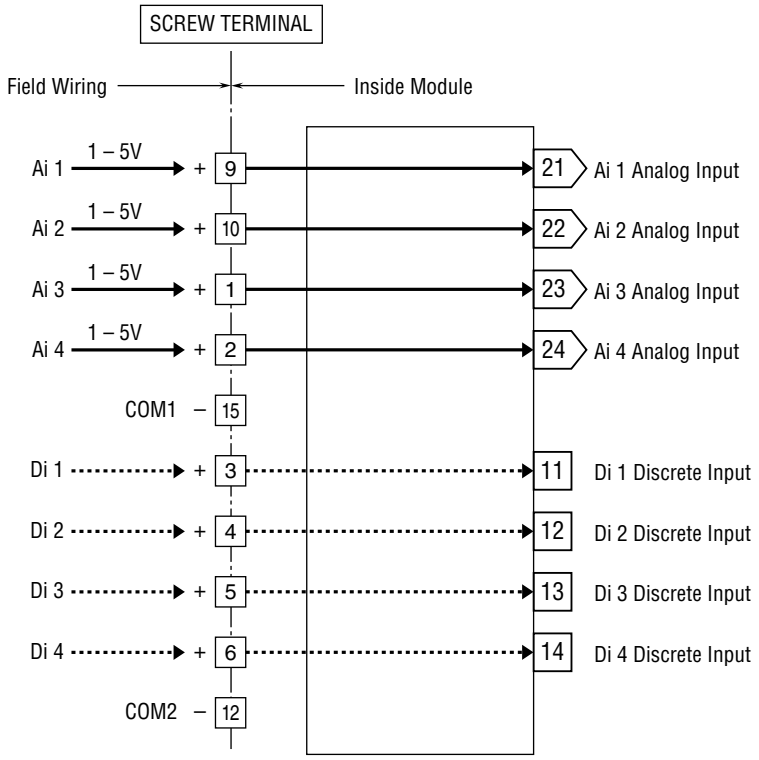

GROUP [01] ★: Setting data

ITEM	MDFY	DATA INPUT	DISPLAY (e.g.)	CONTENTS
01	●	(always modifiable)		■ MAINTENANCE SWITCH (lock command)
		0	MT: 0	MONITOR mode: data monitoring only
		1	MT: 1	PROGRAM mode: "▲" marked data modifiable
		S	MT: S	SIMULATION mode: "❄" marked data modifiable
02	IND	No input	ER: NN	Error indication (00: normal, 01 – 90: error)
10	**IND**	**11**	**MD: 11**	**FIELD TERMINAL (model)**
DISCRETE INPUT INDICATION				
11	▲ ❄	0, 1	11: N	Di 1 discrete input
12	▲ ❄	0, 1	12: N	Di 2 :
13	▲ ❄	0, 1	13: N	Di 3 :
14	▲ ❄	0, 1	14: N	Di 4 :
ANALOG INPUT INDICATION				
21	▲ ❄	-15.00 – 115.00 %	21: NNN.NN	Ai 1 input indication
22	▲ ❄	-15.00 – 115.00 %	22: NNN.NN	Ai 2 :
23	▲ ❄	-15.00 – 115.00 %	23: NNN.NN	Ai 3 :
24	▲ ❄	-15.00 – 115.00 %	24: NNN.NN	Ai 4 :
ANALOG INPUT ZERO/SPAN ADJUSTMENTS				
★ 31	▲	±115.00 %	1Z: 0.00	Ai 1 zero adjustment (zero bias)
★ 32	▲	±3.2000	1S: 1.0000	Ai 1 span adjustment (gain)
★ 33	▲	±115.00 %	2Z: 0.00	Ai 2 zero
★ 34	▲	±3.2000	2S: 1.0000	Ai 2 span
★ 35	▲	±115.00 %	3Z: 0.00	Ai 3 zero
★ 36	▲	±3.2000	3S: 1.0000	Ai 3 span
★ 37	▲	±115.00 %	4Z: 0.00	Ai 4 zero
★ 38	▲	±3.2000	4S: 1.0000	Ai 4 span

SML-S6 Field Terminal

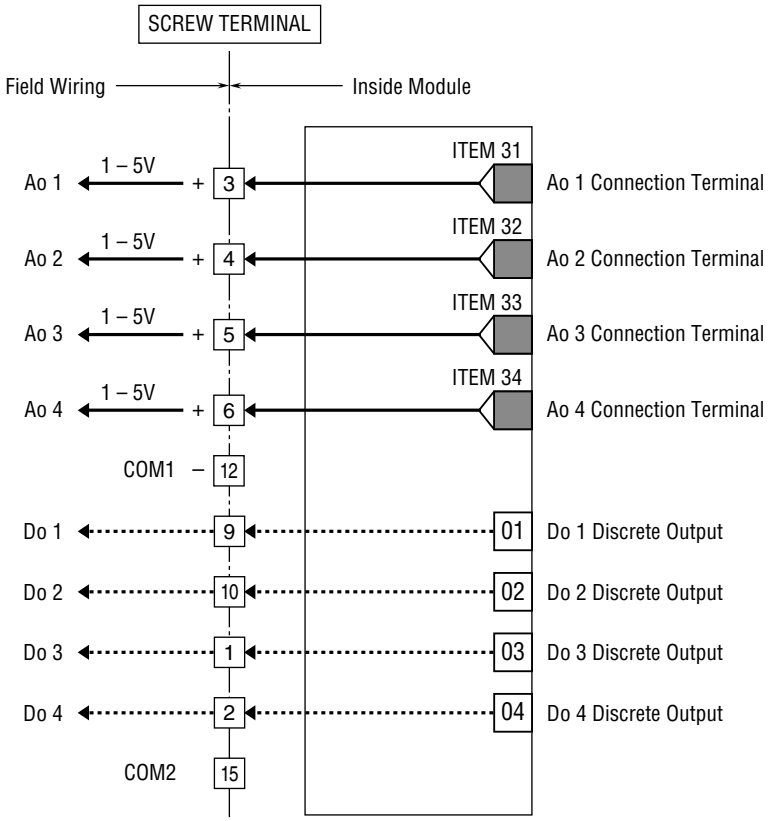

GROUP [01] ★: Setting data

ITEM	MDFY	DATA INPUT	DISPLAY (e.g.)	CONTENTS
01	●	(always modifiable)		■ MAINTENANCE SWITCH (lock command)
		0	MT: 0	MONITOR mode: data monitoring only
		1	MT: 1	PROGRAM mode: "▲" marked data modifiable
02	IND	No input	ER: NN	Error indication (00: normal, 01 – 90: error)
10	**IND**	**11**	**MD: 11**	**FIELD TERMINAL (model)**
DISCRETE OUTPUT INDICATION				
11	▲	0, 1	01: N	Do 1 discrete output
12	▲	0, 1	02: N	Do 2 :
13	▲	0, 1	03: N	Do 3 :
14	▲	0, 1	04: N	Do 4 :
ANALOG OUTPUT INDICATION				
21	▲	-15.00 – 115.00 %	01: NNN.NN	Ao 1 output indication
22	▲	-15.00 – 115.00 %	02: NNN.NN	Ao 2 :
23	▲	-15.00 – 115.00 %	03: NNN.NN	Ao 3 :
24	▲	-15.00 – 115.00 %	04: NNN.NN	Ao 4 :
ANALOG OUTPUT CONNECTION TERMINAL		GG: GROUP NO., NN: TERMINAL NO.		
★ 31	▲	GGNN	1#: 0225	Ao 1 connection terminal (error if not connected)
★ 32	▲	GGNN	2#: 1121	Ao 2 connection terminal (error if not connected)
★ 33	▲	GGNN	3#: 1122	Ao 3 connection terminal (error if not connected)
★ 34	▲	GGNN	4#: 1221	Ao 4 connection terminal (error if not connected)
ANALOG OUTPUT ZERO/SPAN ADJUSTMENTS				
★ 41	▲	±115.00 %	1Z: 0.00	Ao 1 zero adjustment (zero bias)
★ 42	▲	±3.2000	1S: 1.0000	Ao 1 span adjustment (gain)
★ 43	▲	±115.00 %	2Z: 0.00	Ao 2 zero
★ 44	▲	±3.2000	2S: 1.0000	Ao 2 span
★ 45	▲	±115.00 %	3Z: 0.00	Ao 3 zero
★ 46	▲	±3.2000	3S: 1.0000	Ao 3 span
★ 47	▲	±115.00 %	4Z: 0.00	Ao 4 zero
★ 48	▲	±3.2000	4S: 1.0000	Ao 4 span

ABL Field Terminal

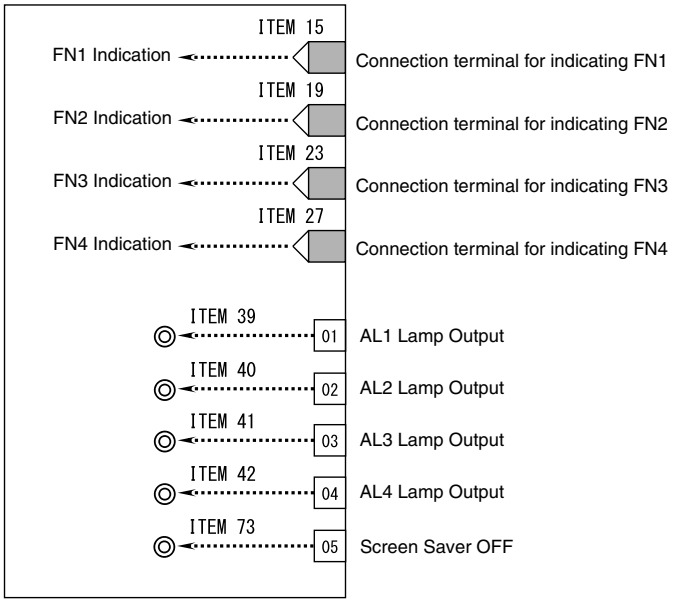

GROUP [01] ★: Setting data

ITEM	MDFY	DATA INPUT	DISPLAY (e.g.)	CONTENTS
01	●	(always modifiable)		■ MAINTENANCE SWITCH "▲" marked data modifiable
		0	MT: 0	MONITOR mode: data monitoring only
		1	MT: 1	PROGRAM mode: "▲" marked data modifiable
		S	MT: S	SIMULATION mode: "❄" marked data modifiable
02	IND	No input	ER: NN	Error indication (00: normal, 01 – 90: error)
10	**IND**	**11**	**MD: 11**	**FIELD TERMINAL (model)**
INDICATION				
★ 11	▲	2, 3	GR: 2	Primary Group No. (valid after reset)
★ 12	▲	0, 1	M1: N	Primary MV operational range (0: ±115%, 1: -15 – +115%)
★ 13	▲	0, 1	M2: N	Secondary MV operational range (0: ±115%, 1: -15 – +115%)
★ 15	▲	GGNN	1F: 3121	FN1 connection terminal for indication GG: Group No. NN: terminal No.
★ 16	▲	±32000	1H: 1500	FN1 upper range (in engineering unit)
★ 17	▲	±32000	1L: 0	FN1 lower range (in engineering unit)
★ 18	▲	0, 1, 2, 3, 4, 5	1D: 1	FN1 decimal point position (from rightmost digit)
★ 19	▲	GGNN	2F: GGNN	FN2 connection terminal for indication GG: Group No. NN: terminal No.
★ 20	▲	±32000	2H: NNNNN	FN2 upper range (in engineering unit)
★ 21	▲	±32000	2L: NNNNN	FN2 lower range (in engineering unit)
★ 22	▲	0, 1, 2, 3, 4, 5	2D: N	FN2 decimal point position (from rightmost digit)
★ 23	▲	GGNN	3F: GGNN	FN3 connection terminal for indication GG: Group No. NN: terminal No.
★ 24	▲	±32000	3H: NNNNN	FN3 upper range (in engineering unit)
★ 25	▲	±32000	3L: NNNNN	FN3 lower range (in engineering unit)
★ 26	▲	0, 1, 2, 3, 4, 5	3D: N	FN3 decimal point position (from rightmost digit)
★ 27	▲	GGNN	4F: GGNN	FN4 connection terminal for indication GG: Group No. NN: terminal No.
★ 28	▲	±32000	4H: NNNNN	FN4 upper range (in engineering unit)
★ 29	▲	±32000	4L: NNNNN	FN4 lower range (in engineering unit)
★ 30	▲	0, 1, 2, 3, 4, 5	4D: N	FN4 decimal point position (from rightmost digit)

	ITEM	MDFY	DATA INPUT	DISPLAY (e.g.)	CONTENTS
★	31	▲	alphanumeric	T1: XXX...X	FN1 tag name (max. 10 characters)
★	32	▲	alphanumeric	T2: XXX...X	FN2 tag name (max. 10 characters)
★	33	▲	alphanumeric	T3: XXX...X	FN3 tag name (max. 10 characters)
★	34	▲	alphanumeric	T4: XXX...X	FN4 tag name (max. 10 characters)
★	35	▲	alphanumeric	U1: XXX...X	FN1 engineering unit (max. 8 characters)
★	36	▲	alphanumeric	U2: XXX...X	FN2 engineering unit (max. 8 characters)
★	37	▲	alphanumeric	U3: XXX...X	FN3 engineering unit (max. 8 characters)
★	38	▲	alphanumeric	U4: XXX...X	FN4 engineering unit (max. 8 characters)
	39	▲ ❄	0, 1	01: N	AL1 lamp output
	40	▲ ❄	0, 1	02: N	AL2 lamp output
	41	▲ ❄	0, 1	03: N	AL3 lamp output
	42	▲ ❄	0, 1	04: N	AL4 lamp output
★	43	▲	alphanumeric	L1: XXXX	AL1 comment (max. 4 characters)
★	44	▲	alphanumeric	L2: XXXX	AL2 comment (max. 4 characters)
★	45	▲	alphanumeric	L3: XXXX	AL3 comment (max. 4 characters)
★	46	▲	alphanumeric	L4: XXXX	AL4 comment (max. 4 characters)
★	71	▲	10 – 100 s/100%	ST: 10	SP UP/DOWN speed by holding down the buttons (It operates at 1/5 speed for the first 5 seconds, and at 1/2 speed for the next 5 seconds)
★	72	▲	10 – 100 s/100%	ST: 10	MV UP/DOWN speed by holding down the buttons (It operates at 1/5 speed for the first 5 seconds, and at 1/2 speed for the next 5 seconds)
	73	▲	0, 1	05: 1	Screen saver is turned off. (0: ON, 1: OFF)

ABBR	FIELD TERMINAL	ABBR
EX1	ABL Extension Field Terminal 1	EX1

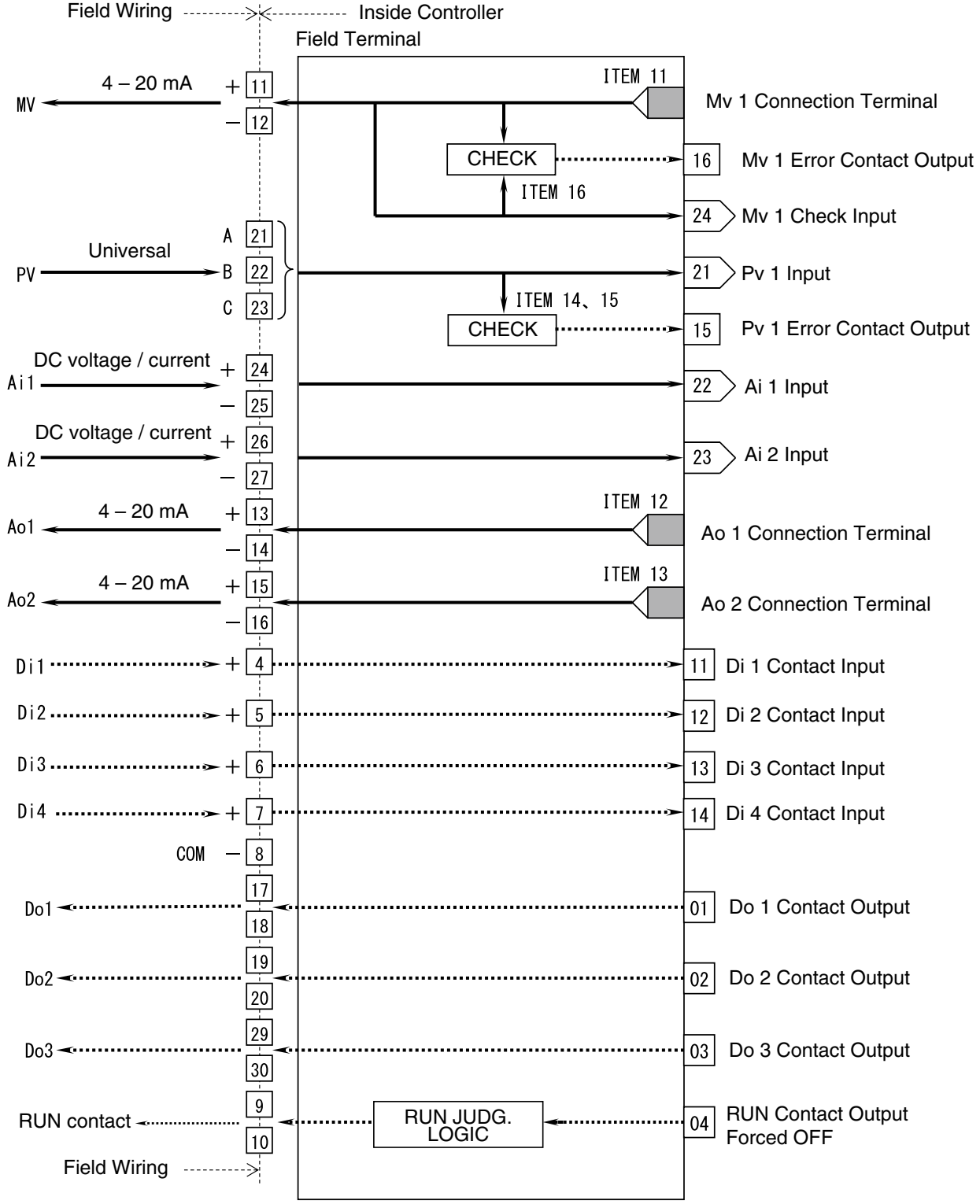

GROUP [04] ★: Setting data

ITEM	MDFY	DATA INPUT	DISPLAY (e.g.)	CONTENTS
01	●	(always modifiable)		■ MAINTENANCE SWITCH "▲" marked data modifiable
		0	MT: 0	MONITOR mode: data monitoring only
		1	MT: 1	PROGRAM mode: "▲" marked data modifiable
		S	MT: S	SIMULATION mode: "❄" marked data modifiable
ANALOG INPUT INDICATION				
03	▲ ❄	-15.00 – 115.00 %	21: NNN.NN	PV input
04	▲ ❄	-15.00 – 115.00 %	22: NNN.NN	Ai 1 input
05	▲ ❄	-15.00 – 115.00 %	23: NNN.NN	Ai 2 input
06	▲ ❄	-15.00 – 115.00 %	24: NNN.NN	MV check input
ANALOG OUTPUT INDICATION				
07	▲	-15.00 – 115.00 %	MV1: NNN.NN	MV output
08	▲	-15.00 – 115.00 %	AO1: NNN.NN	Ao 1 output
09	▲	-15.00 – 115.00 %	AO2: NNN.NN	Ao 2 output
10	**IND**	**12**	**MD: 12**	**EXTENSION FIELD TERMINAL 1 (model)**
ANALOG OUTPUT CONNECTION TERMINAL				
★ 11	▲	GGNN	M1#: 0225	MV connection terminal (error if not connected) GG: Group No. NN : terminal No.
★ 12	▲	GGNN	A1#: 0225	Ao 1 connection terminal (error if not connected) GG: Group No. NN : terminal No.
★ 13	▲	GGNN	A2#: 0225	Ao 2 connection terminal (error if not connected) GG: Group No. NN : terminal No.
PV / MV SETTING				
★ 14	▲	-15.00 – 115.00 %	PH: NNN.NN	PV high alarm setpoint (for error judgment)
★ 15	▲	-15.00 – 115.00 %	PL: NNN.NN	PV low alarm setpoint (for error judgment)
★ 16	▲	0.00 – 115.00 %	ML: NNN.NN	MV deviation alarm setpoint (for error judgment)
★ 17	▲	MM	TP: MM	PV input type [MM: input type No.] 0: 0 to 10 V 8: E 16: U 1: 0 to 5 V 9: J 17: L 2: 1 to 5 V 10: T 18: P 3: -1 to +1 11: B 19: PR 4: 0 to 1 V 12: R 20: Pt100 (JIS '97, IEC) 5: 0 to 20 mA 13: S 21: Pt100 (JIS '89) 6: 4 to 20 mA 14: C 22: JPt100 (JIS '89) 7: K 15: N
★ 18	▲	-272.0 – 3000.0	HT1: 1000	PV upper range temperature
★ 19	▲	-272.0 – 3000.0	LT1: .0	PV lower range temperature
★ 20	▲	0, 1	CJ	PV cold junction compensation (0: Without, 1: With)
23	▲ ❄	0, 1	15: N	PV error contact output
24	▲ ❄	0, 1	16: N	MV error contact output
★ 41	▲	±115.00 %	PZ: 0.00	PV zero adjustment (zero bias)
★ 42	▲	±3.2000	PS: 1.0000	PV span adjustment (gain)
★ 43	▲	±115.00 %	MZ: 0.00	MV zero adjustment (zero bias)
★ 44	▲	±3.2000	MS: 1.0000	MV span adjustment (gain)
★ 45	▲	±115.00 %	IZ1: 0.00	Ai 1 zero adjustment (zero bias)
★ 46	▲	±3.2000	IS1: 1.0000	Ai 1 span adjustment (gain)
★ 47	▲	±115.00 %	IZ2: 0.00	Ai 2 zero adjustment (zero bias)
★ 48	▲	±3.2000	IS2: 1.0000	Ai 2 span adjustment (gain)
★ 49	▲	±115.00 %	CZ: 0.00	MV check input zero adjustment (zero bias)
★ 50	▲	±3.2000	CS: 1.0000	MV check input span adjustment (gain)

ITEM	MDFY	DATA INPUT	DISPLAY (e.g.)	CONTENTS
★ 51	▲	±115.00 %	OZ1: 0.00	Ao 1 zero adjustment (zero bias)
★ 52	▲	±3.2000	OS1: 1.0000	Ao 1 span adjustment (gain)
★ 53	▲	±115.00 %	OZ2: 0.00	Ao 2 zero adjustment (zero bias)
★ 54	▲	±3.2000	OS2: 1.0000	Ao 2 span adjustment (gain)
CONTACT INPUT INDICATION				
71	▲ ❄	0, 1	11: N	Di 1 input
72	▲ ❄	0, 1	12: N	Di 2 input
73	▲ ❄	0, 1	13: N	Di 3 input
74	▲ ❄	0, 1	14: N	Di 4 input
CONTACT OUTPUT INDICATION				
75	▲ ❄	0, 1	01: N	Do 1 output
76	▲ ❄	0, 1	02: N	Do 2 output
77	▲ ❄	0, 1	03: N	Do 3 output
78	▲ ❄	0, 1	04: N	RUN contact output forced OFF (1: OFF)

ABL Extension Field Terminal 2

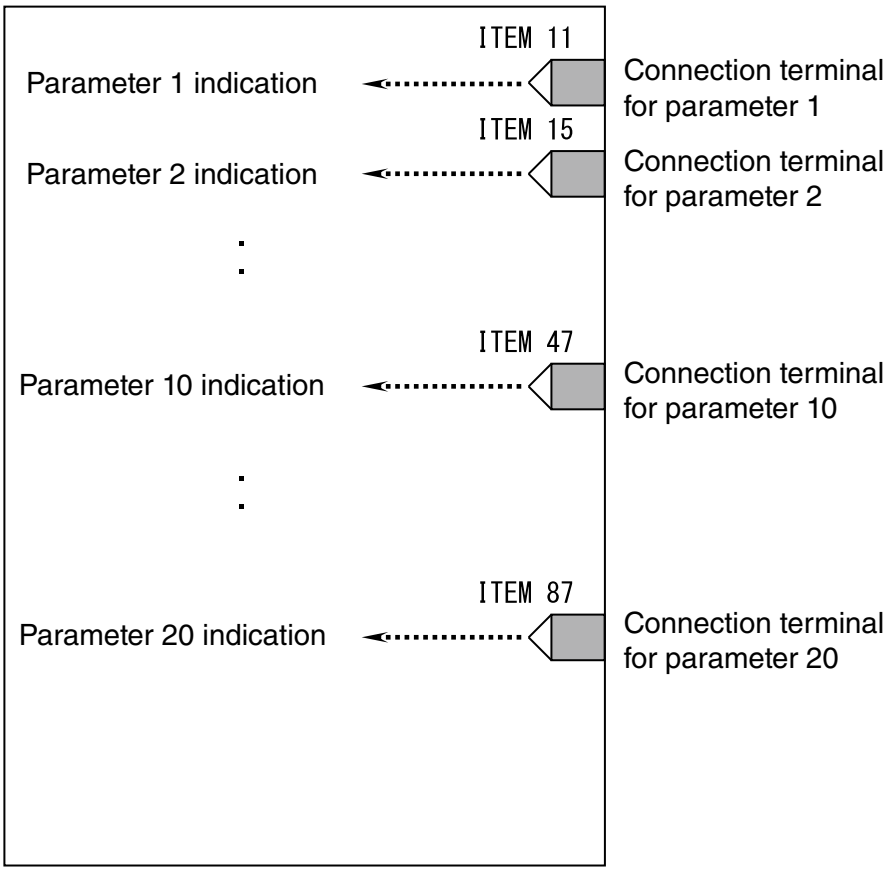

GROUP [05] ★: Setting data

	ITEM	MDFY	DATA INPUT	DISPLAY (e.g.)	CONTENTS
	01	●	(always modifiable)		■ MAINTENANCE SWITCH "▲" marked data modifiable
			0	MT: 0	MONITOR mode: data monitoring only
			1	MT: 1	PROGRAM mode: "▲" marked data modifiable
			S	MT: S	SIMULATION mode: "❄" marked data modifiable
	10	**IND**	**13**	**MD: 13**	**EXTENSION FIELD TERMINAL 2 (model)**
PARAMETER SETTING					
★	11	▲	GGII	P01#: 0227	Connection terminal for parameter 1
★	12	▲	±32000	P01H: 10000	Parameter 1 upper range
★	13	▲	±32000	P01L: 0	Parameter 1 lower range
★	14	▲	0, 1, 2, 3, 4, 5	P01DP: 2	Parameter 1 decimal point position (from rightmost digit)
★	15	▲	GGII	P02#: NNNN	Connection terminal for parameter 2
★	16	▲	±32000	P02H: NNNNN	Parameter 2 upper range
★	17	▲	±32000	P02L: NNNNN	Parameter 2 lower range
★	18	▲	0, 1, 2, 3, 4, 5	P02DP: N	Parameter 2 decimal point position (from rightmost digit)
★	19	▲	GGII	P03#: NNNN	Connection terminal for parameter 3
★	20	▲	±32000	P03H: NNNNN	Parameter 3 upper range
★	21	▲	±32000	P03L: NNNNN	Parameter 3 lower range
★	22	▲	0, 1, 2, 3, 4, 5	P03DP: N	Parameter 3 decimal point position (from rightmost digit)
★	23	▲	GGII	P04#: NNNN	Connection terminal for parameter 4
★	24	▲	±32000	P04H: NNNNN	Parameter 4 upper range
★	25	▲	±32000	P04L: NNNNN	Parameter 4 lower range
★	26	▲	0, 1, 2, 3, 4, 5	P04DP: N	Parameter 4 decimal point position (from rightmost digit)
★	27	▲	GGII	P05#: NNNN	Connection terminal for parameter 5
★	28	▲	±32000	P05H: NNNNN	Parameter 5 upper range
★	29	▲	±32000	P05L: NNNNN	Parameter 5 lower range
★	30	▲	0, 1, 2, 3, 4, 5	P05DP: N	Parameter 5 decimal point position (from rightmost digit)
★	31	▲	GGII	P06#: NNNN	Connection terminal for parameter 6
★	32	▲	±32000	P06H: NNNNN	Parameter 6 upper range
★	33	▲	±32000	P06L: NNNNN	Parameter 6 lower range
★	34	▲	0, 1, 2, 3, 4, 5	P06DP: N	Parameter 6 decimal point position (from rightmost digit)
★	35	▲	GGII	P07#: NNNN	Connection terminal for parameter 7
★	36	▲	±32000	P07H: NNNNN	Parameter 7 upper range
★	37	▲	±32000	P07L: NNNNN	Parameter 7 lower range
★	38	▲	0, 1, 2, 3, 4, 5	P07DP: N	Parameter 7 decimal point position (from rightmost digit)
★	39	▲	GGII	P08#: NNNN	Connection terminal for parameter 8
★	40	▲	±32000	P08H: NNNNN	Parameter 8 upper range
★	41	▲	±32000	P08L: NNNNN	Parameter 8 lower range
★	42	▲	0, 1, 2, 3, 4, 5	P08DP: N	Parameter 8 decimal point position (from rightmost digit)
★	43	▲	GGII	P09#: NNNN	Connection terminal for parameter 9
★	44	▲	±32000	P09H: NNNNN	Parameter 9 upper range
★	45	▲	±32000	P09L: NNNNN	Parameter 9 lower range
★	46	▲	0, 1, 2, 3, 4, 5	P09DP: N	Parameter 9 decimal point position (from rightmost digit)
★	47	▲	GGII	P10#: NNNN	Connection terminal for parameter 10
★	48	▲	±32000	P10H: NNNNN	Parameter 10 upper range
★	49	▲	±32000	P10L: NNNNN	Parameter 10 lower range
★	50	▲	0, 1, 2, 3, 4, 5	P10DP: N	Parameter 10 decimal point position (from rightmost digit)
★	51	▲	GGII	P11#: NNNN	Connection terminal for parameter 11
★	52	▲	±32000	P11H: NNNNN	Parameter 11 upper range
★	53	▲	±32000	P11L: NNNNN	Parameter 11 lower range
★	54	▲	0, 1, 2, 3, 4, 5	P11DP: N	Parameter 11 decimal point position (from rightmost digit)

ITEM	MDFY	DATA INPUT	DISPLAY (e.g.)	CONTENTS
★ 55	▲	GGII	P12#: NNNN	Connection terminal for parameter 12
★ 56	▲	±32000	P12H: NNNNN	Parameter 12 upper range
★ 57	▲	±32000	P12L: NNNNN	Parameter 12 lower range
★ 58	▲	0, 1, 2, 3, 4, 5	P12DP: N	Parameter 12 decimal point position (from rightmost digit)
★ 59	▲	GGII	P13#: NNNN	Connection terminal for parameter 13
★ 60	▲	±32000	P13H: NNNNN	Parameter 13 upper range
★ 61	▲	±32000	P13L: NNNNN	Parameter 13 lower range
★ 62	▲	0, 1, 2, 3, 4, 5	P13DP: N	Parameter 13 decimal point position (from rightmost digit)
★ 63	▲	GGII	P14#: NNNN	Connection terminal for parameter 14
★ 64	▲	±32000	P14H: NNNNN	Parameter 14 upper range
★ 65	▲	±32000	P14L: NNNNN	Parameter 14 lower range
★ 66	▲	0, 1, 2, 3, 4, 5	P14DP: N	Parameter 14 decimal point position (from rightmost digit)
★ 67	▲	GGII	P15#: NNNN	Connection terminal for parameter 15
★ 68	▲	±32000	P15H: NNNNN	Parameter 15 upper range
★ 69	▲	±32000	P15L: NNNNN	Parameter 15 lower range
★ 70	▲	0, 1, 2, 3, 4, 5	P15DP: N	Parameter 15 decimal point position (from rightmost digit)
★ 71	▲	GGII	P16#: NNNN	Connection terminal for parameter 16
★ 72	▲	±32000	P16H: NNNNN	Parameter 16 upper range
★ 73	▲	±32000	P16L: NNNNN	Parameter 16 lower range
★ 74	▲	0, 1, 2, 3, 4, 5	P16DP: N	Parameter 16 decimal point position (from rightmost digit)
★ 75	▲	GGII	P17#: NNNN	Connection terminal for parameter 17
★ 76	▲	±32000	P17H: NNNNN	Parameter 17 upper range
★ 77	▲	±32000	P17L: NNNNN	Parameter 17 lower range
★ 78	▲	0, 1, 2, 3, 4, 5	P17DP: N	Parameter 17 decimal point position (from rightmost digit)
★ 79	▲	GGII	P18#: NNNN	Connection terminal for parameter 18
★ 80	▲	±32000	P18H: NNNNN	Parameter 18 upper range
★ 81	▲	±32000	P18L: NNNNN	Parameter 18 lower range
★ 82	▲	0, 1, 2, 3, 4, 5	P18DP: N	Parameter 18 decimal point position (from rightmost digit)
★ 83	▲	GGII	P19#: NNNN	Connection terminal for parameter 19
★ 84	▲	±32000	P19H: NNNNN	Parameter 19 upper range
★ 85	▲	±32000	P19L: NNNNN	Parameter 19 lower range
★ 86	▲	0, 1, 2, 3, 4, 5	P19DP: N	Parameter 19 decimal point position (from rightmost digit)
★ 87	▲	GGII	P20#: NNNN	Connection terminal for parameter 20
★ 88	▲	±32000	P20H: NNNNN	Parameter 20 upper range
★ 89	▲	±32000	P20L: NNNNN	Parameter 20 lower range
★ 90	▲	0, 1, 2, 3, 4, 5	P20DP: N	Parameter 20 decimal point position (from rightmost digit)

4. EXPLANATIONS

4.1 GENERAL DESCRIPTION

• Only One Software for All Devices

Every module in the MsysNet system utilizes one common software, except for the Field Terminal specifically used for each of them. If you learn how to configure one module, you will understand all others.

• No Computer Language: Software Function Blocks

The MsysNet system does not use any specialized computer language, but the "Software Function Blocks". It incorporates programming concepts for PID controllers, computation modules or PLCs which are familiar to users.

• User-Friendly Parameter Setting Software

Loop Configuration Builder software for the SC100/200 Series (model: SFEW3E) is available. With the builder software, you can build configuration files, copy them, save them, and print them.

4.2 RELATION BETWEEN FUNCTION BLOCKS

- Close connection between PID control and sequential control
- I/O point expansion via software terminal blocks
- Automatic parameters and setpoints change via "Parameter Setter" block

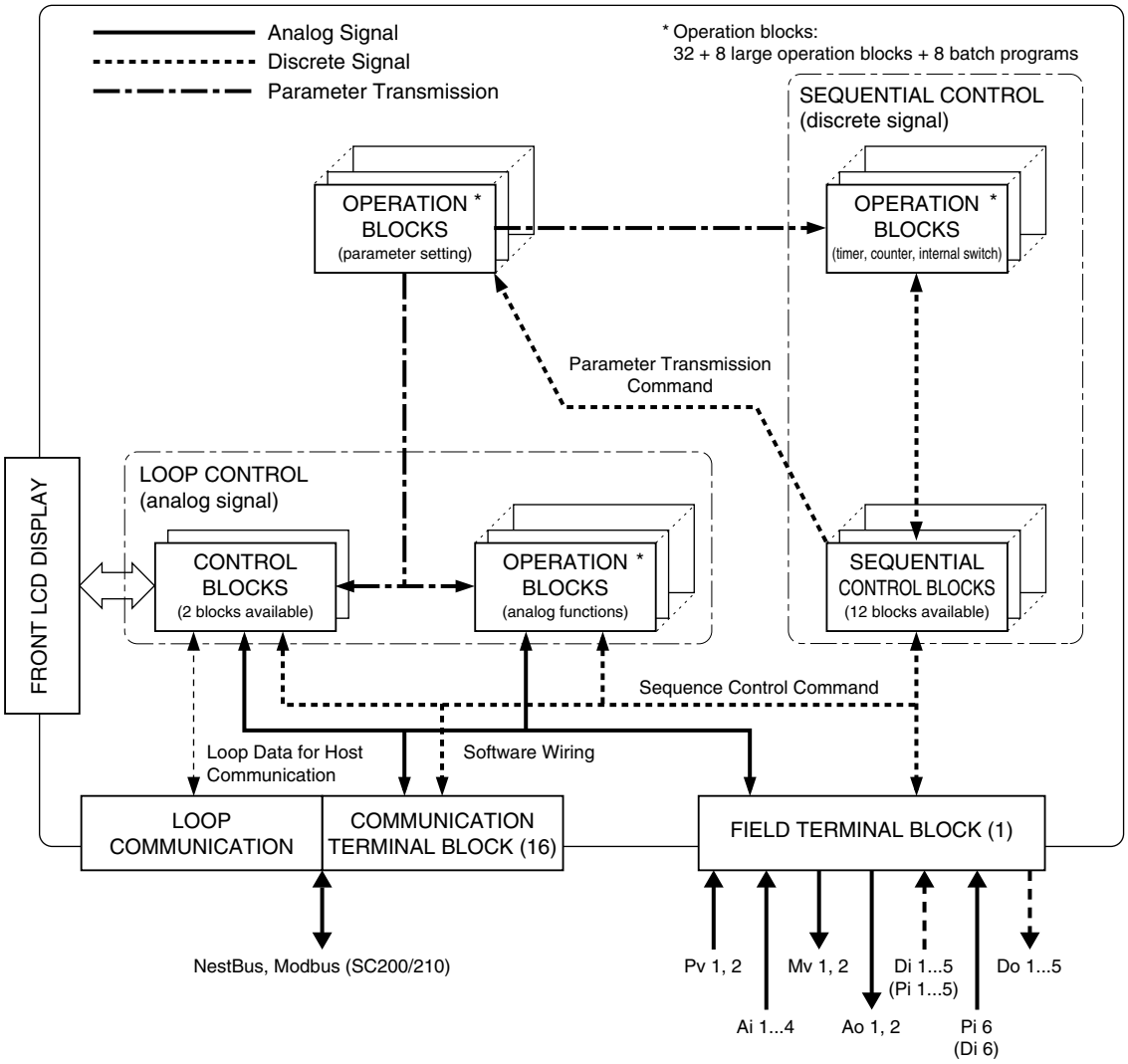

4.3 FUNCTION BLOCK ALLOCATIONS

Capability of one module of the SC100/200 Series, number and type of function blocks and their allocations, would be well explained if you imagine an instrument panel.

- Number of instruments mountable in one instrument panel is as shown in the figure below. A Group No. means allocation No. in the panel.
- You choose a Group No. and program a Function Block model in ITEM 10. Then all other available ITEMs will be shown according to the function model.
- For the Field Terminal block, users cannot change the model setting.

No. in each block indicates GROUP No.

02	03							**CONTROL BLOCKS (2)**
30	31	32	33	34	35	36	37	**OPERATIONS BLOCKS (32)** Analog functions, parameter setting, timer, counter, internal switch
38	39	40	41	42	43	44	45	
46	47	48	49	50	51	52	53	
54	55	56	57	58	59	60	61	
62	63	64	65	66	67	68	69	**BATCH PROGRAM BLOCKS (8)**
72	73	74	75	76	77	78	79	**LARGE OPERATIONS BLOCKS (8)**
80								**SYSTEM'S INTERNAL SWITCH BLOCK (1)**
81	82	83	84	85	86	87	88	**SEQUENTIAL CONTROL COMMANDS BLOCKS (12)**
89	90	91	92					
11	12	13	14	15	16	17	18	**COMMUNICATION TERMINAL BLOCKS (16)** **SC200/210 only**
19	20	21	22	23	24	25	26	
01								**FIELD TERMINAL BLOCK (1)**
04								**EXTENSION FIELD TERMINAL 1 BLOCK (1)**
05								**EXTENSION FIELD TERMINAL 2 BLOCK (1)**
00								**SYSTEM COMMON TABLE (1)**

4.4 CONNECTING BETWEEN FUNCTION BLOCKS

4.4.1 EXAMPLE OF CONNECTION TERMINALS REPRESENTATION IN A FUNCTION BLOCK

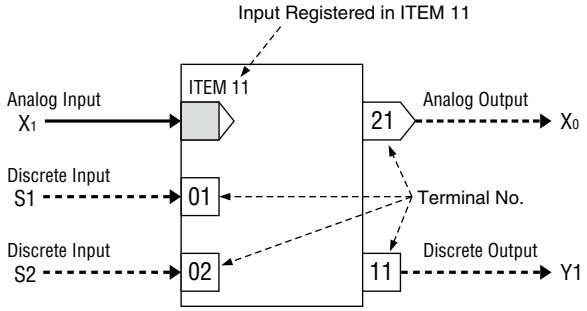

4.4.2 CONNECTING ANALOG SIGNALS

- Input signal: Group No. and Terminal No. of the signal you need to input (GGNN) is described in a designated ITEM of the target function block.
- Output signal: Output terminal No. is determined for each function block type.

[Example]

If Basic PID block needs to input PV signal from Field Terminal block, the terminal No. of PV signal is represented as 0421 (04: Group No., 21: Terminal No.). Then you write 0421 in ITEM 15 in the PID block.

[Analog Connection Terminal '0099']

When one or more analog output terminals in Field Terminal block are not used, set '0099' to these terminals if they give errors when not connected.

4.4.3 CONNECTING DISCRETE SIGNALS

Discrete I/O terminals are available in function blocks. You can process these I/O signals via relay logic programs in Sequential Control Program block or via Contact Distributor block.

Relay Logic Program

- Discrete input: Discrete input terminal No. is allocated to a coil in relay logic program. It can be input also as discrete signal of the relay logic.
- Discrete output: Discrete output terminal No. pre-determined for each function block type is input as discrete signal of the relay logic.

Contact Distributor

A discrete input is connected to a discrete output just like analog signals. Combination of terminals for discrete input and output is registered in the Contact Distributor block.

4.4.4 PARAMETER SETTER

Various parameters and their output connection terminals (location of the parameter) are preset in Parameter Setter function block and sent when necessary via a trigger signal from Sequential Control Program block.

WARNING !

Parameters in the Parameter Setter block are rewritable up to 100 000 times. For example, if parameters are updated every one hour, the memory will reach its usable limit in approx. 11 years.

4.4.5 ITEM READER

Parameters are converted into analog signals via this ITEM Reader block.

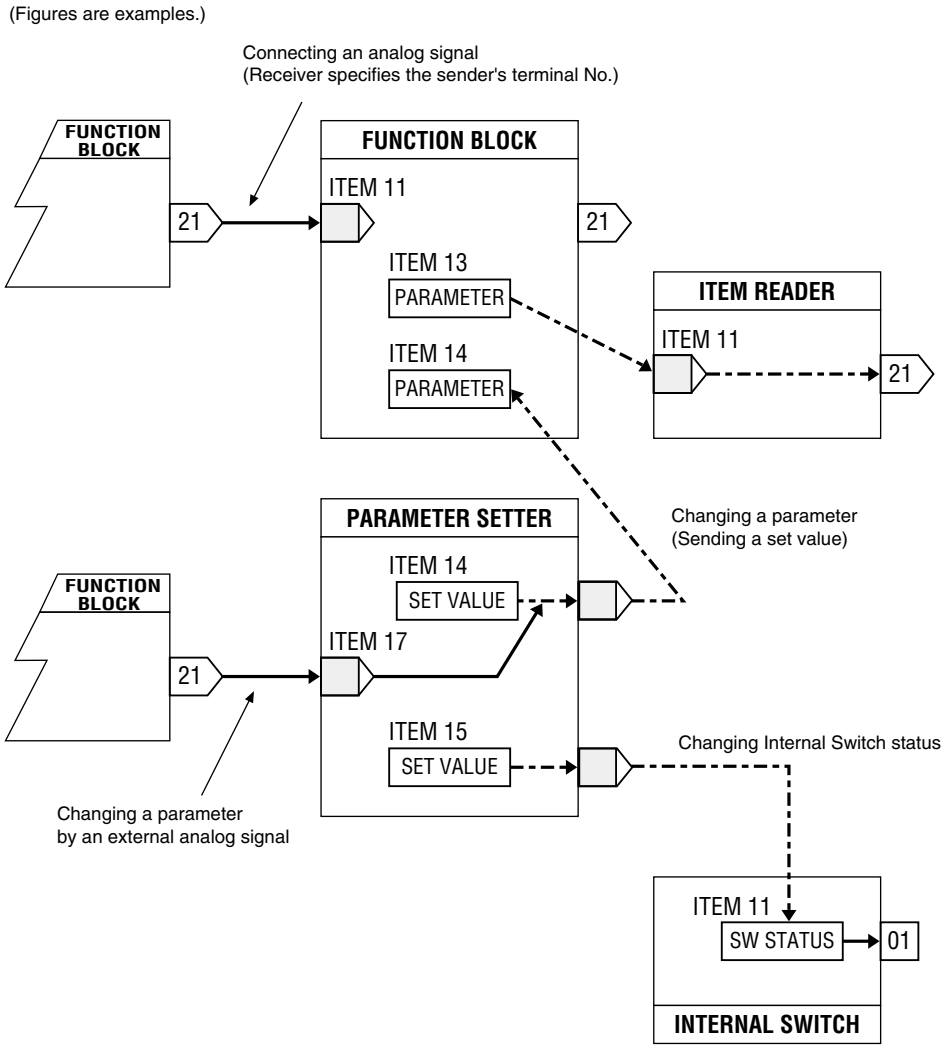

4.5 SOFTWARE COMMUNICATION BY COMMUNICATION TERMINALS

Communication Terminal blocks are used for sending/receiving analog signals and discrete signals between hardware modules.

Sending and Receiving Principles

Token passing protocol is used in this system. A token (right to transmit) goes around nodes (devices connected to the network). Each device, in its turn, broadcasts transmission data to the network. Other devices listen to them and take in necessary data. There are four (4) communication terminal blocks as following:

- Di Receive Terminal: Discrete input, 32 points
- Do Send Terminal: Discrete output, 32 points
- Ai Receive Terminal: Analog input, 2 points
- Ao Send Terminal: Analog output, 2 points

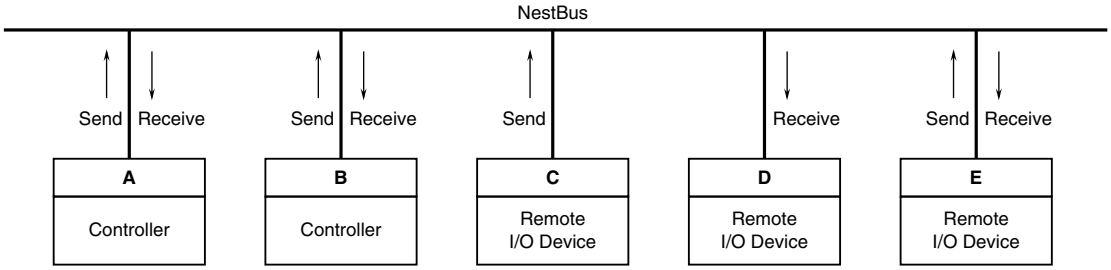

For transmitting data from the device A to the device B in the example shown above, first set necessary data in Send Terminal of the device A and broadcasts them to the network. Then set in Receive Terminal of the device B with the sender address specifying the device A, and take in the data from the network.
Transmission data are broadcasted to the network together with their sender address. If another device requires to receive one of these data, set in its Receive terminal with the required sender address.

Address Setting Example

The following is an example of actual setting to transmit between the Controller A and B (or remote I/O C or D) mentioned in the above figure. In the figure below, boxes in solid line indicate data set in ITEMs of Communication Terminal blocks. Those in broken line indicates those set by other means such like Programming menu on the Controller or DIP switches of remote I/O device.

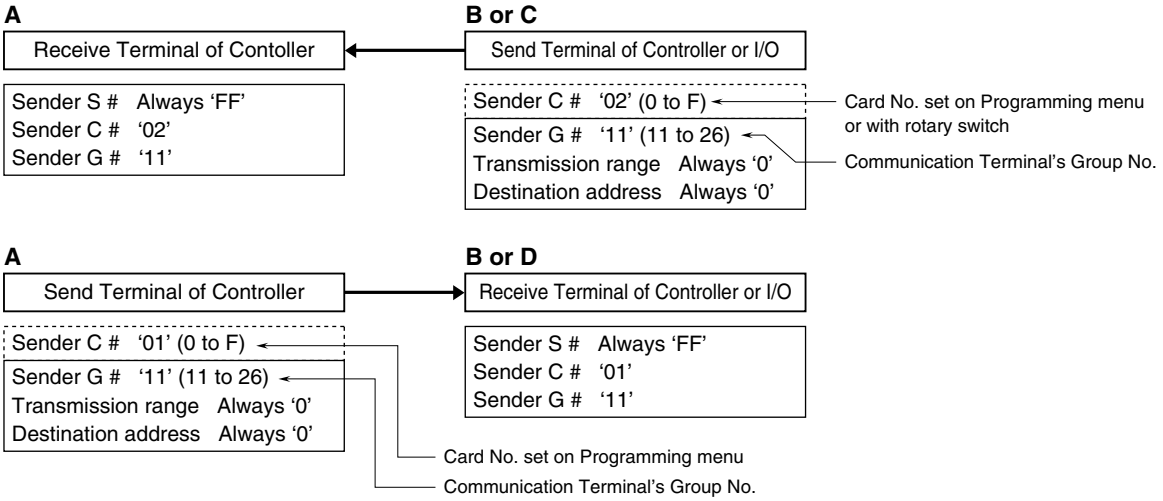

Appendix 1. FUNCTION BLOCK ERROR CODES

The following shows the meaning of error codes indicated in ITEM 02 of each function block.

CODE	EXPLANATIONS
ER : 00	Normal
ER : 01	Connection terminal 1 undefined
ER : 02	Connection terminal 2 undefined
ER : 03	Connection terminal 3 undefined
ER : 04	Connection terminal 4 undefined
ER : 05	Connection terminal 5 undefined
ER : 06	Connection terminal 6 undefined
ER : 07	Connection terminal 7 undefined
ER : 08	Connection terminal 8 undefined
ER : 09	Connection terminal 9 undefined
ER : 10	Computation error: Divided by ‘0’
ER : 11	Computation error: Result out of boundary*
ER : 20	Communication terminal error: Not received
ER : 21	Communication terminal error: Connected external device error
ER : 22	Internal connected device error
ER : 70	Invalid block combination
ER : 80	Sequence error: Invalid command
ER : 81	Sequence error: Undefined connection terminal
ER : 87	Sequence error: Non-registered step
ER : 88	Sequence error: Register overflow
ER : 89	Sequence error: One-shot overflow
ER : 90	EEPROM data base failed**

* 32767 < result < -32768
** When the error is indicated, write ‘1’ at GROUP 00, ITEM 95 to execute BLOCK RELEASE in PROGRAM mode, or execute download after the EEPROM is cleared by the Loop Configuration Software.

Appendix 2. SC SERIES VERSION UPGRADE INFORMATION

■ V 1.40 or later

• Model 58 Segment Linearizer: 16 segments are available instead of 7.

• Model 64 Moving Average
ITEM 12: Sampling 0.5 – 115.0 seconds (min. 0.5 sec. increments) ➔ 0.1 – 115.0 seconds (min. 0.1 sec. increments)
ITEM 13: Number of samples 1 – 16 ➔ 1 – 32
ITEM 15: Calculation mode (new ITEM)

• Model F70, F71, F72, F73 SCxxx Extension Field Terminal 2
ITEM 52: Di/Pi selection (new ITEM). Pi 6 (high speed pulse input) can be replaced with Di 6 (discrete input).

ITEM added to F70, F71, F72, F73 SCxxx Extension Field Terminal 2 block

ITEM	MDFY	DATA INPUT	DISPLAY (e.g.)	CONTENTS
★ 52	▲	0, 1	PD6: N	Di/Pi selection (0: Di 6, 1: Pi 6)

■ V 1.50 or later

• System Common Table (for SC100/200 series): Manual resetting of RUN contact is available.

ITEMs added to System Common Table (for SC100/200 series)

ITEM	MDFY	DATA INPUT	DISPLAY (e.g.)	CONTENTS
60	▲			■ RUN CONTACT ERROR RESET MODE
		0, 1	RUN: 0	Automatic reset
			RUN: 1	Manual reset
61	●			■ RUN CONTACT ERROR RESET FLAG
		0, 1	0	Normal
			1	Reset (valid when ITEM 60 is set to ‘manual reset’)

• Model 21 Basic PID, Model 22 Advanced PID: Effective range setting for the anti-reset windup function is available.

ITEMs added to PID blocks

ITEM	MDFY	DATA INPUT	DISPLAY (e.g.)	CONTENTS
★ 68	▲	0, 1	ARW: N	Integral action range (0: MH – ML, 1: set range)
★ 69	▲	±115.00 %	ARH: NNN.NN	Integral action high limit (valid when ITEM 68 is set to ‘1’)
★ 70	▲	±115.00 %	ARL: NNN.NN	Integral action low limit (valid when ITEM 68 is set to ‘1’)

• Model 17 Rate of Change Limit block is available.
• Model F72, F73 SC110/SC210 Extension Field Terminal 1: Backup status is available.

ITEM added to F72, F73 SC110/SC210 Extension Field Terminal 1 block

ITEM	MDFY	DATA INPUT	DISPLAY (e.g.)	CONTENTS
87	▲	0, 1	15: N	Backup status (0: normal, 1: backup)