Remote I/O R80 Series

EXTENSION POWER SUPPLY MODULE

(non-isolated)

Functions & Features

- Inserted between I/O modules and supply the power
- Up to two R80PS1 use is available

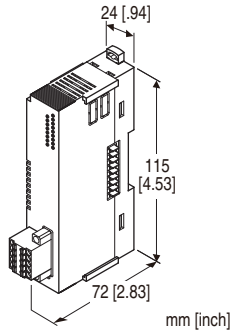

MODEL: R80PS1-R[1]

ORDERING INFORMATION

- Code number: R80PS1-R[1]

Specify a code from below for [1].
(e.g. R80PS1-R/Q)

- Specify the specification for option code /Q
  (e.g. /C01)

POWER INPUT

DC power

R: 24 V DC
(Operational voltage range: ±10 %; ripple 10 %p-p max.)

[1] OPTIONS

blank: none
/Q: With options (specify the specification)

SPECIFICATIONS OF OPTION: Q

COATING (For the detail, refer to M-System's web site.)

/C01: Silicone coating
/C02: Polyurethane coating

CAUTION

OUTPUT CURRENT & NUMBER OF CONNECTABLE UNIT

It is NOT available to connect 16 of R80UST4 to power/network module because of limitation of output current of internal supply. The max. output current for internal supply of power/network module is 1.6 A.
The max. consumption current for internal supply of R80UST4 is 170 mA.

1.6 (A) < 170 (mA) x 16 = 2.72(A)

Inserting the R8-PS1 between 9th and 10th R80PS1 enables to connect 16 of R80UST4.

POWER UP

Turn the power on at the same time as the power/network module or turn the R80PS1 on before the power/network module turned on. If the R80PS1 is not turned on within 3 seconds after the power/network module is turned on, I/O modules are not correctly recognized

GENERAL SPECIFICATIONS

Connection

•Power input, excitation supply: Tension clamp (Front Twin connection)

Applicable wire size: 0.2 - 1.5 mm^2

Stripped length: 10 mm

•Internal bus or internal power: Via connector

Max. number of I/O modules: 16
(Max. consumption current of I/O modules: 1.6 A)

Isolation: Internal bus or internal power or power input to exc. supply to FE1

Power indicator LED: Green LED turns on when the power is supplied.

INSTALLATION

Power consumption

•DC: Approx. 11 W 24 V DC (@ internal power max. current 1.6 A)

Internal power supply (power supply for I/O module):

- DC power supply: 5 V DC
- Current capacity: 1.6 A

Excitation supply output (excitation for I/O module)

•DC: 24 V DC ±10 %

•Operational current: 8 A

(From power supply, exitation supply connector, via connector for internal bus, supplied to each I/O module. Power output current consumption must be under operational current.)

Operating temperature: -10 to +55°C (14 to 131°F)
Operating humidity: 10 to 90 %RH (non-condensing)
Atmosphere: No corrosive gas or heavy dust
Mounting: DIN rail
Weight: 100 g (0.22 lb)

PERFORMANCE

Insulation resistance: ≥ 100 MΩ with 500 V DC
Dielectric strength: 1500 V AC @ 1 minute
(internal bus or internal power or power input to exc. supply to FE1)

STANDARDS & APPROVALS

EU conformity:

EMC Directive

EMI EN 61000-6-4

EMS EN 61000-6-2

RoHS Directive

EXTERNAL VIEW

■ **FRONT VIEW** ■ **SIDE VIEW**

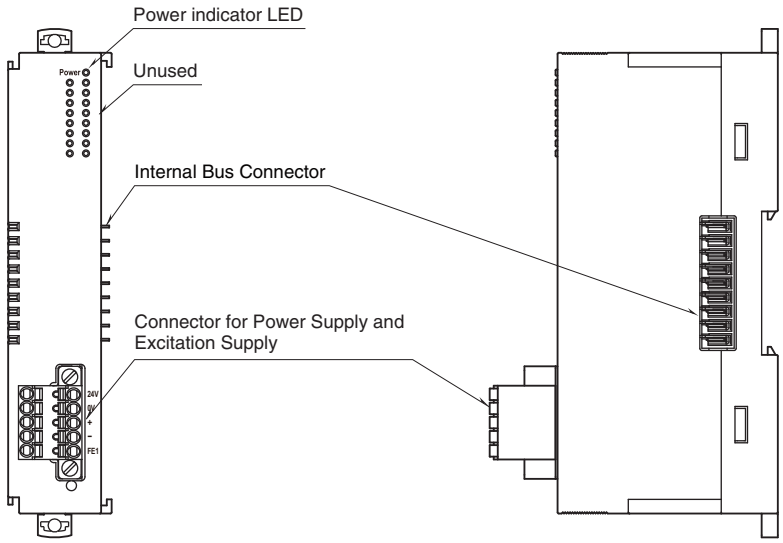

CONNECTION DIAGRAMS

■ **POWER SUPPLY, EXCITATION SUPPLY CONNECTOR ASSIGNMENT**

Printed-circuit board connector (Phoenix Contact)

Unit side connector: MC1,5/5-GF-3,5

Cable side connector: TFMC1,5/5-STF-3,5

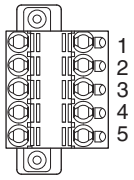

PIN No.	ID	FUNCTION
1	24V	Power supply 24V DC
2	0V	Power supply 0V DC
3	+	Excitation supply 24V DC
4	–	Excitation supply 0V DC
5	FE1	Grounding

Note: The numbers marked on the connector have no relationship to the pin number of the unit.
Wire according to the instruction manual of the unit.

DIMENSIONS unit: mm (inch)

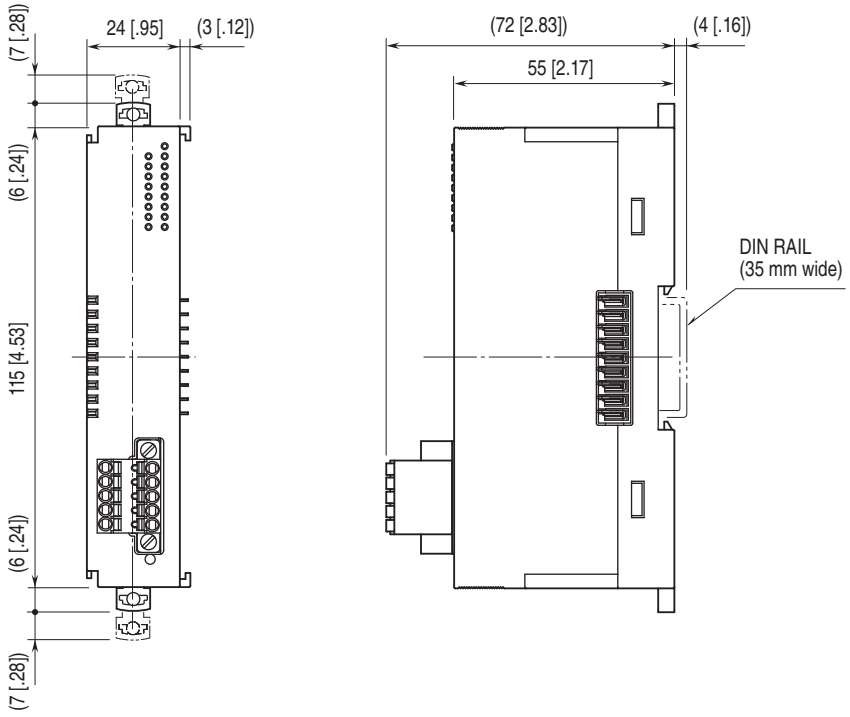

SCHEMATIC CIRCUITRY

Note: In order to improve EMC performance, bond the FE1 terminal to ground.

Caution: FE1 terminal is NOT a protective conductor terminal.

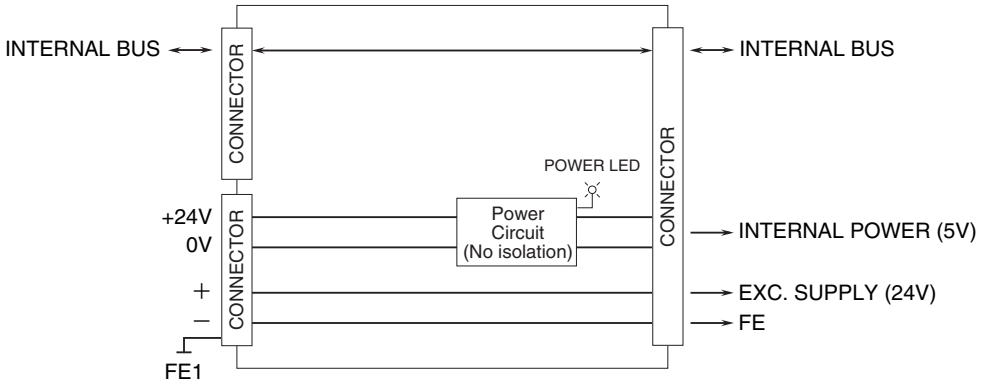

Internal bus is connected for the modules near to the power/network module out of the modules connected to the R80PS1. Internal power and Exc. supply are not connected. All modules far from the power/network module are connected.

⚠ Specifications are subject to change without notice.