INSTRUCTION MANUAL

THERMISTOR INPUT MODULE, 4 points
(CC-Link V.1.10)

MODEL **R7C-RT4A**

BEFORE USE ....

Thank you for choosing M-System. Before use, please check contents of the package you received as outlined below.
If you have any problems or questions with the product, please contact M-System's Sales Office or representatives.

■ PACKAGE INCLUDES:

Thermistor input module ..... (1)
Terminating resistor (110Ω, 0.25W) ..... (1)

■ MODEL NO.

Confirm Model No. marking on the product to be exactly what you ordered.

■ INSTRUCTION MANUAL

This manual describes necessary points of caution when you use this product, including installation, connection and basic maintenance procedures.

POINTS OF CAUTION

■ GENERAL PRECAUTIONS

- Before you remove the unit or mount it, turn off the power supply and input signal for safety.

■ ENVIRONMENT

- Indoor use
- When heavy dust or metal particles are present in the air, install the unit inside proper housing with sufficient ventilation.
- Do not install the unit where it is subjected to continuous vibration. Do not subject the unit to physical impact.
- Environmental temperature must be within -10 to +55°C (14 to 131°F) with relative humidity within 30 to 90% RH in order to ensure adequate life span and operation.

■ WIRING

- Do not install cables (power supply, input and output) close to noise sources (relay drive cable, high frequency line, etc.).
- Do not bind these cables together with those in which noises are present. Do not install them in the same duct.

■ AND ....

- The unit is designed to function as soon as power is supplied, however, a warm up for 10 minutes is required for satisfying complete performance described in the data sheet.

COMPONENT IDENTIFICATION

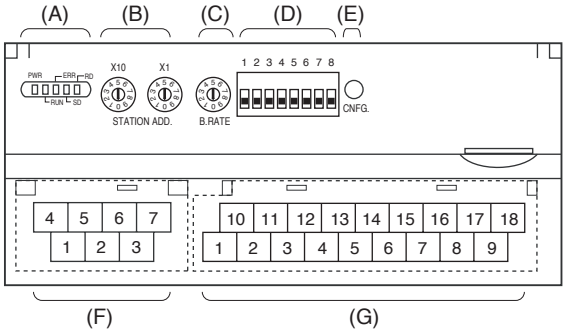

(A) Status Indicator LED *1
(B) Station Address Setting Rotary SW
(C) Baud Rate Setting Rotary SW
(D) Operating Mode Setting DIP SW (SW1)
(E) PC Configurator Jack
(F) CC-Link, Power Supply Terminals
(G) Input Terminals

*1. Refer to 'Status Indicator LED' section for detailed information.

■ STATUS INDICATOR LED

ID	COLOR	FUNCTION
PWR	Red	Turns on when the internal 5V is supplied normally.
RUN	Red	Turns on when the refresh data is received normally.
ERR	Red	Turns on when the received data is abnormal.
SD	Red	Turns on when the module is transmitting.
RD	Red	Turns on when the module is receiving.

■ STATION ADDRESS

Station Address is selected between 1 and 64 in decimal. The left switch determines the tenth place digit, while the right switch does the ones place digit of the address.

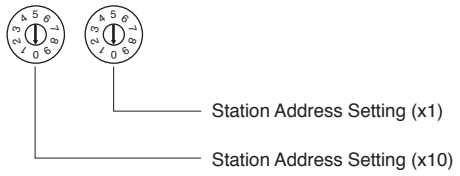

■ BAUD RATE

Baud Rate is selected with the rotary switch.

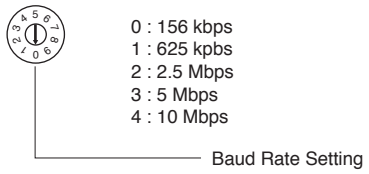

■ EXTENSION MODULE

Combinations with the R7C-EA8, R7C-EA16, R7C-EC8A, R7C-EC16A, R7C-EC8B or the R7C-EC16B are selectable.

■ OPERATING MODE

• Extension (SW1-1, 1-2)

SW1-1	SW1-2	Extension
OFF	OFF	No extension (*)
ON	OFF	Discrete input, 8 or 16 points
OFF	ON	Discrete output, 8 or 16 points

• Conversion rate (SW1-3)

SW1-3	Conversion rate
OFF	250 msec. (*)
ON	500 msec.

• Burnout (SW1-4)

SW1-4	Burnout
OFF	Upscale (*)
ON	Downscale

(*) Factory setting

Caution! SW 1-5, 1-6, 1-7 and 1-8 are unused. Be sure to turn OFF unused ones.

■ POWER SUPPLY, CC-LINK TERMINAL ASSIGNMENT

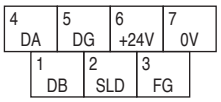

NO.	ID	FUNCTION, NOTES
1	DB	White
2	SLD	Shield
3	FG	FG
4	DA	Blue
5	DG	Yellow
6	+24V	Power input (24V DC)
7	0V	Power input (0V)

■ INPUT TERMINAL ASSIGNMENT

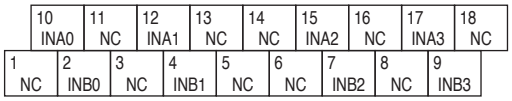

NO.	ID	FUNCTION	NO.	ID	FUNCTION
1	NC	No connection	10	INA0	Thermistor 0-A
2	INB0	Thermistor 0-B	11	NC	No connection
3	NC	No connection	12	INA1	Thermistor 1-A
4	INB1	Thermistor 1-B	13	NC	No connection
5	NC	No connection	14	NC	No connection
6	NC	No connection	15	INA2	Thermistor 2-A
7	INB2	Thermistor 2-B	16	NC	No connection
8	NC	No connection	17	INA3	Thermistor 3-A
9	INB3	Thermistor 3-B	18	NC	No connection

INDICATOR LED

■ STATUS INDICATOR LED

PWR	RUN	ERR	SD	RD	STATUS
ON	ON	BL	BL	ON	Communicates normally with occasional CRC errors due to noise interference.
ON	ON	BL	BL	ON	Communicates normally but the Baud Rate and/or Station Address switches failed. ERR LED BLashes approximately in 0.5 second intervals.
ON	ON	BL	BL	OFF	----
ON	ON	BL	OFF	ON	CRC error found in the received data. Unable to respond.
ON	ON	BL	OFF	OFF	----
ON	ON	OFF	BL	ON	Normal communication
ON	ON	OFF	BL	OFF	----
ON	ON	OFF	OFF	ON	Unable to receive data addressed to the station.
ON	ON	OFF	OFF	OFF	----
ON	OFF	BL	BL	ON	Performs the interval-timed responses but CRC error found in receiving the refresh data.
ON	OFF	BL	BL	OFF	----
ON	OFF	BL	OFF	ON	CRC error found in the data addressed to the station.
ON	OFF	BL	OFF	OFF	----
ON	OFF	OFF	BL	ON	Link is not started.
ON	OFF	OFF	BL	OFF	----
ON	OFF	OFF	OFF	ON	No data addressed to the station. Or unable to receive data addressed to the station due to noise interference. (Missing parts of the data sent from the master)
ON	OFF	OFF	OFF	OFF	Unable to receive data due to wire breakdown
ON	OFF	ON	OFF	ON/OFF	Faulty Baud Rate and/or Station Address setting
OFF	OFF	OFF	OFF	OFF	Power input removed. Or power supply failure.

OFF = OFF, ON = ON, BL = Blinking
---- = Inconceivable in normal operations (e.g. LED failure)

CONNECTION DIAGRAM

Connect the unit as in the diagram below.

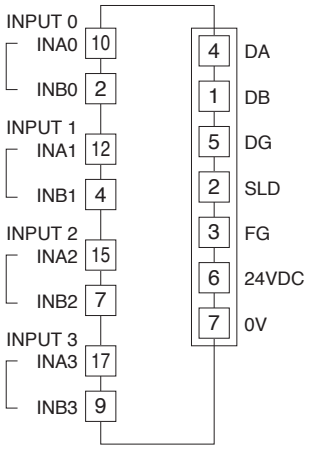

■ **Input Connection Example**

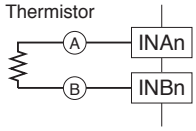

WIRING INSTRUCTIONS

■ **SOLDERLESS TERMINAL mm (inch)**

Refer to the drawing below for recommended ring tongue terminal size. Spade tongue type is also applicable. Solderless terminals with insulation sleeve do not fit. Applicable wire size: 0.3 – 0.75 mm²

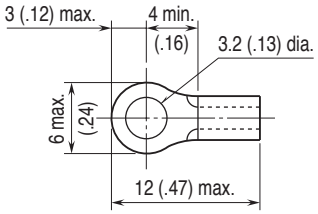

EXTERNAL DIMENSIONS unit: mm (inch)

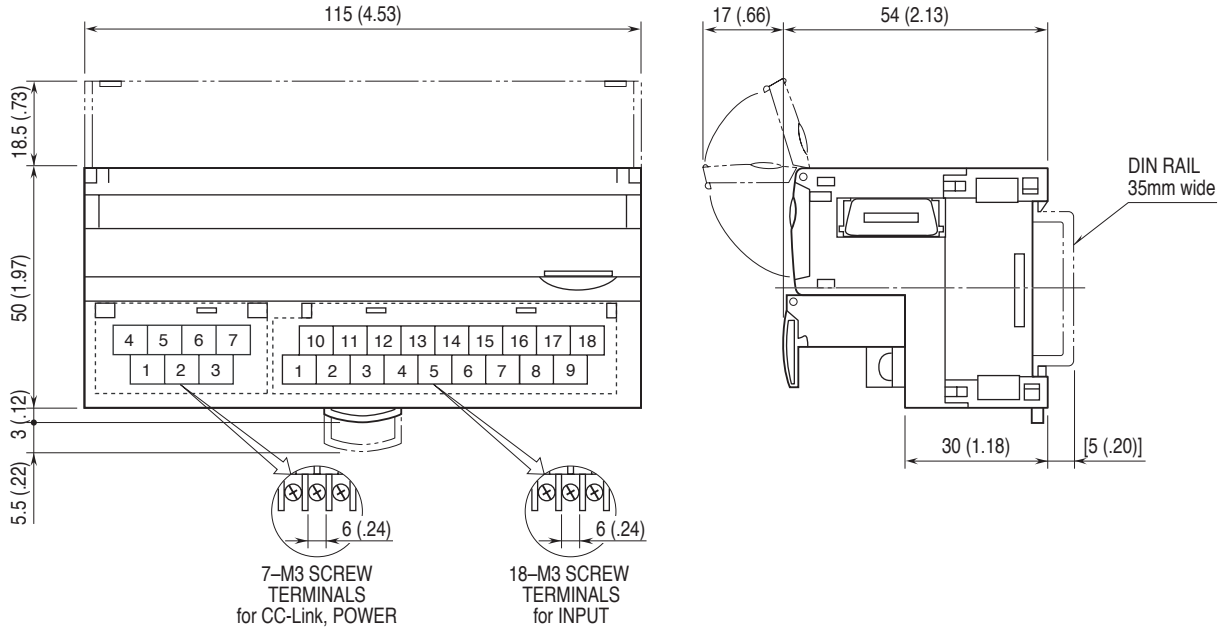

M-System Co., Ltd., 5-2-55, Minamitsumori, Nishinari-ku, Osaka 557-0063 JAPAN, Phone: (06) 6659-8201, Fax: (06) 6659-8510, E-mail: info@m-system.co.jp